GE
Lighting Solutions

VLA Model
LED Signal Modules

8 and 12 inch
Incandescent look (120V)

Robust Features

- Over-molded electrical connectors prevent water wicking through wires.
- Optimal thermal management for longer life.
- Provides performance under extreme field temperature conditions.

Innovative Design

- Low profile module permits efficient installation into existing traffic housings.
- Power consumption levels allow compatibility with most controllers.
- Mask compatible to fit your unique signaling needs.*

Outstanding Performance

- High-brightness central light source and custom optical lensing distribute light uniformly and efficiently.
- Rigorously tested for long life design and low maintenance costs.
- Excellent color uniformity.

Meets Rigorous Certification & Testing Standards

- Intertek ETL Verified compliant.
- Compliant with ITE VTCSH LED Circular Signal Supplement dated June 27th 2005.
- CSA approved.

* Sold separately. Refer to masks datasheet TRAF208.

imagination at work

The Greatest Signals Stand the Test of Time.™

VLA Model LED Signal Modules

- 8 and 12 inch

Mechanical Outline

Dimensions in inches [mm]

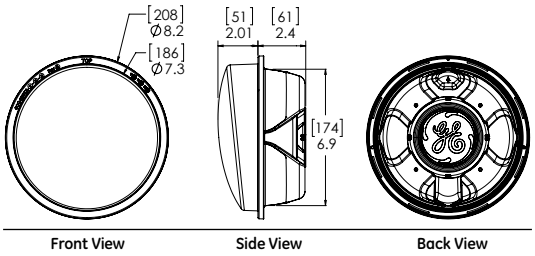

8 inch

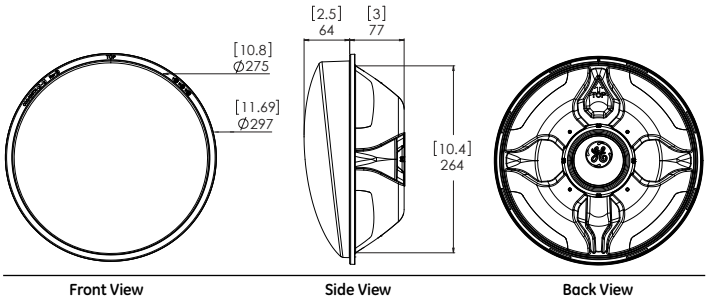

12 inch

Design Compliance

Test type	Compliance
Luminous Intensity	ITE VTCSH- LED Circular Signal Supplement -June 2005
Chromaticity	ITE VTCSH- LED Circular -June 2005
Moisture Resistance	Blown Wind Rain MIL-STD-810F method 506.4
Mechanical Vibration	MIL-STD-883 Method 2007
Electronic Noise	FCC Title 47 Sub. B Sec 15[1]
Transient Voltage Protection	Sec. 2.1.6 NEMA TS2-2003, 300V, 2500W Sec. 2 .1.6 NEMA TS2-2003, 600V, 10µF Sec. 2.1.8 NEMA TS2-2003, 1kV, 2Ω
Controller Compatibility	ITE VTCSH- LED Circular Signal Supplement -June 2005
Wiring	NFPA 70, National Electric Code
Transient Suppression	Sec. 8.2 IEC 61000-4-5 & Sec. 6.1.2 ANSI/IEEE C62.41.2 - 2002, 3KV, 2 Ω Sec. 8.0 IEC 61000-4-12 & Sec. 6.1.1 ANSI/IEEE C62.41.2 - 2002, 6KV, 30 Ω

Operating Specifications

Parameter	Rating
Operating Temperature Range*	-40 to +74°C (-40 to +165°F)
Operating Voltage Range	80 to 135 V (60Hz AC)
Power Factor (PF)	> 90%
Total Harmonic Distortion (THD)	< 20%
Minimum Voltage Turn-Off (VTO)	35 V
Turn-On / Turn-Off Time	< 50 ms
Lens & Shell Material	UV Stabilized Polycarbonate
Wiring	40 in, 18 AWG, Color Coded with Strain Relief

* Operating Temperature Range per ITE 2005, Section 3.3.2

Product Information

Model Number	Front Shell	Size (in)	AC Voltage Nominal	Power (W) Nominal	Wavelength (nm) nominal	Maintained Intensity (Cd) Minimum[2]
DR4-RTFB-VLA	Tinted	8	120V - 60Hz	6.4	628	240
DR4-RCFB-VLA	Clear					
DR4-YTFB-VLA	Tinted	8	120V - 60Hz	9.9	589	760
DR4-YCFB-VLA	Clear					
DR4-GTFB-VLA	Tinted	8	120V - 60Hz	6.4	499	450
DR4-GCFB-VLA	Clear					
DR6-RTFB-VLA	Tinted	12	120V – 60Hz	10.2	626	365
DR6-RCFB-VLA	Clear					
DR6-YTFB-VLA	Tinted	12	120V – 60Hz	12.6	589	910
DR6-YCFB-VLA	Clear					
DR6-GTFB-VLA	Tinted	12	120V – 60Hz	10.6	502	475
DR6-GCFB-VLA	Clear					

Standard product equipped with universal connectors (insulated spade-quick disconnect).
All lamps available in tinted or clear lens.

[1] Class A

[2] Measured at vertical angle of -2.5° and at horizontal angle of 0°.

Distributed by:

RAI Products
Traffic Control And ITS Solutions
PO BOX 240772 Charlotte, NC 28224
info@raiproducts.com
www.raiproducts.com
TOLL FREE 888-776-7325

GE Lighting Solutions • **1-888-MY-GE-LED** • www.gelightingsolutions.com
1 - 8 8 8 - 6 9 - 4 3 - 5 3 3

GE Lighting Solutions, LLC is a subsidiary of the General Electric Company. The GE brand and logo are trademarks of the General Electric Company. © 2012 GE Lighting Solutions, LLC. Information provided is subject to change without notice. All values are design or typical values when measured under laboratory conditions.