INTRODUCTION

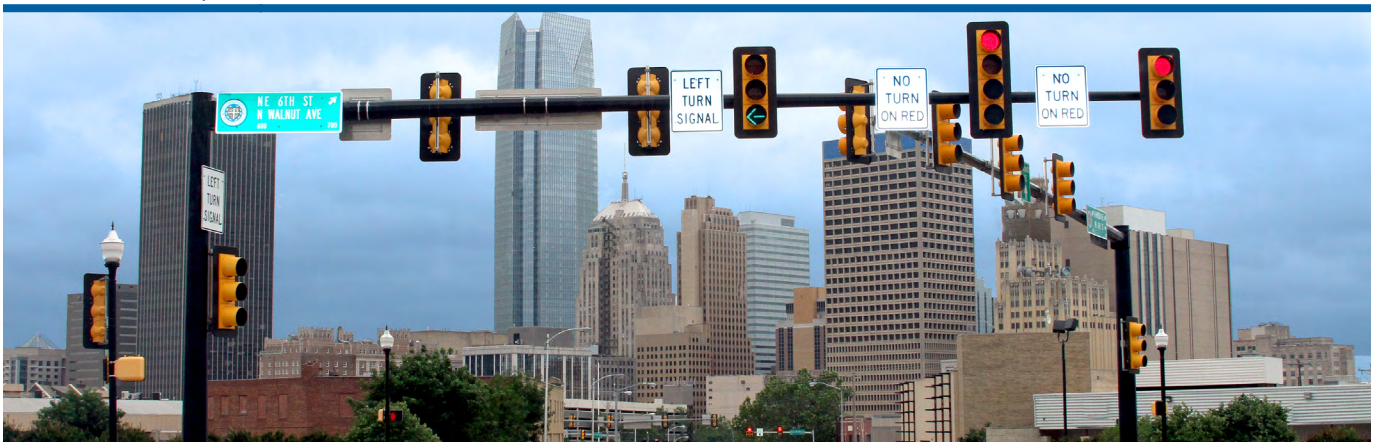

Pelco Products, Inc. meets the needs of the traffic industry around the world by providing top quality products. Pelco's innovative designs lead the way with products that withstand the dynamic effects of nature, while adding value to any project. Utilizing the latest in technology and streamlined manufacturing, Pelco offers a complete line of traffic products and accessories. As an ISO 9001 certified company, Pelco is dedicated to meeting the needs of our customers while adhering to regulatory requirements based on quality management principles.

Astro-Brac
Introduced in 1968, the Astro-Brac family of signal, sign, and camera mounts has proven to be the most versatile mounting system ever designed. With continual improvement of the Astro-Brac product line, Pelco can provide a solution for virtually any mounting requirement. Available in various style clamp kits with band, cable, or tenon mount, the Astro-Brac can mount to any shape of mast arm or pole.

Signal Mountings
Post Top, Side-of-Pole, Span Wire, or Mast Arm mounts in aluminum, iron, or bronze can provide the solution to any traffic mounting application while meeting municipalities standard specifications.

IntelliCross, Push Buttons & Stations
Pelco's IntelliCross APS turns an intersection into a fully actuated pedestrian intersection. Modular Pedestrian Stations offer a versatile flexible option for various sign sizes. Pelco's durable Push Buttons are available with the Passport Piezo or a mechanical switch, which meet the American with Disabilities Act. Pelco's Pedestrian Signs are manufactured with a UV laminate overlay for a superior extended life sign.

Backplates & GPL's
Pelco offers both AeroFlex™ PVC flexible and ABS vacuum formed backplates, with and without reflective borders, to fit a variety signal head configurations. The Pelco GPL, which offers a less expensive alternative to a standard OPS signal head, is an easy to install signal louvering system, designed for both lane control and sight distance applications.

Signal Poles & Bases
Pelco's cast aluminum Square Pedestal Base is FHWA certified which meets or exceeds AASHTO break-away requirements. Pelco also offers round, tapered and fluted poles in aluminum, steel and fiberglass.

Mounting Components
Pelco maintains the industries most extensive line of individual hardware and replacement items.

Lighting Solutions & Signage
Pelco's VersaPole™, with a track mounting system, allows luminaires and accessories to be easily installed and adjusted to any position. A wide variety of poles, arms, bases, and anchors for mounting luminaires and signage are available.

Flasher Cabinets, Camera & Sensor Mounts, Mast Arms & Poles, Disconnect Hangers, Decorative Bases
These and many other products are illustrated in our standard catalog. Visit www.pelcoinc.com to view our catalog online or request a paper copy to be mailed to your business address.

Special Applications
Pelco Products, Inc. has always strived to provide the industries best source for products that fill special and unique mounting applications. Our design and engineering capabilities have resulted in hundreds of assemblies that, over the years, have solved mounting problems for customers all over the world. If you do not find the product you need in our standard catalog, contact Pelco Products, Inc. with your specific needs.

TABLE OF CONTENTS

- Product Index
- Part Numbering System
- Coatings
- Conversion Chart
- Terms and Conditions
- Shipping Notice
- Warranty
- Product Sections T1 - T16

PRODUCT INDEX

Astro-Brac Signal Mountings T1
Bracket Assy's, Clamp Kits, Arm Kits, Tubes, Hardware Kits

Free-Swinging Signal Mountings T2
1-Way, 2-Way, Clusters, Disconnect Hangers, Tethers, Hardware Kits

Rigid Side-of-Pole Signal Moutnings T3
1-Way, 2-Way, Tandem, Terminal Compartments

Rigid Post Top Signal Mountings T4
Slip Fitters, 1-Way, 2-Way, Terminal Compartments

Rigid Tenon Signal Mountings T5
Plumbizers, Mast Arm Hangers

Sign Mountings T6
Astro Sign-Brac, Mast Arm Mounts, Span Wire Sign Hangers

Camera Mountings T7
Astro-Brac, Mast Arm, Side-of-Pole, Span Wire

Pedestrian Push Buttons T8
IntelliCross™, Piezo, Mechanical, Stations, Pedestrian Signs

Cabinets T9
Flasher Controllers, Cabinets, Mounting Assy's, Locks

Backplates T10
AeroFlex, Vacuum Formed, Louvered, Split, Flat, Reflective

Poles & Bases T11
Pedestal Bases, Plastic Doors, Poles, Caps, Anchor Bolts

Mast Arms & Poles T12
Ornamental Bases, Pole & Arm Clamps, ITC Assy's, Anchors

Traffic Accessories T13
GPL's, Visors, Confirmation Lights, Copper Safe©

Components T14
Pipe Fittings, Span Wire, Balance Adjusters, Hubs, Banding

Lighting & Poles T15
VersaPole™, Luminaires, Lighting Arms, Poles, Bases, Banner Bracs

Decorative Signage T16
Regulatory Signs, Street Name Signs, Frames, Mounts, Sign Posts

ISO 9001
www.intlcert.com

PART NUMBER SYSTEM

Following is a typical example of how to construct a unique part number for ordering. Options such as signal section, cable length, stainless upgrade, etc., should be indicated by filling in the blank boxes with specific information as shown below. All part numbers should consist of the base part number and at least a finish or coating suffix.

Example:

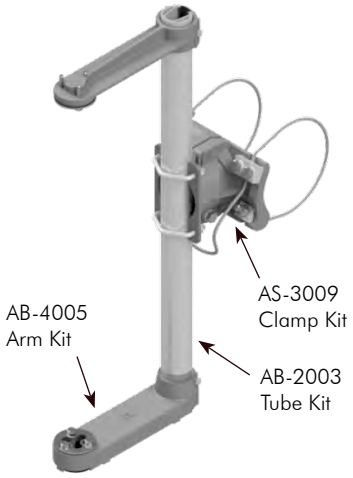

Astro-Brac Stellar Assy, 1-Way Cable Mount

	Signal Section		Cable Length		Cable		Coating
AS-0125	- [3]	-	[62]	-	[ ]	-	[P33]
	1=1 Sec 2=2 Sec 3=3 Sec 4=4 Sec 5=5 Sec		See Note		Blank=Galv SS=Stainless		PNC=Process No Color P_ _=Paint

Note:
Cable Length: 62", 84", 96", 110", 120", 132", 144", 220", or 280".

Part Number
AS-0125-3-62-P33

Signal Section
Cable Length
Coating

Astro-Brac Assembly, Stellar Mount, 1-Way for 3-Section Signal w/ 62" Galv Cable, Powder Coat Gloss Black

- Pelco's standard products with typical options are shown in this catalog. Special options are often available upon request.
- State Specials and Customer Specific Specials are not included in this catalog.
- All information is assumed to be correct at the time of printing. For the most up-to-date information, please check Pelco's online catalog at www.pelcoinc.com

COATINGS

CODE	COATING
PNC	Process No Color
BRS	Brass
CRM	Chrome
GLV	Galvanized
ZN1	Zinc Bright
ZN2	Zinc Yellow
P_ _	Paint *(add color #)*

POWDER COAT STANDARD COLORS	
P29	Federal Yellow
P30	Automatic Green
P32	Clear Coat
P33	Gloss Black
P34	Flat Black
P35	Iron Gray
P36	New York State Green (forest)
P39	Bronze
P40	Silver
P45	Super Wet White
P59	Textured Black
P63	Mocha Brown
P71	Dark Green
P75	Fir Green
P76	Forest Green

Note:
Pelco can match your custom colors.
Please provide the following and contact Pelco for pricing.

- For custom powder: RAL number or paint chip.
- For wet paint: Federal Standard 595 paint code or paint chip.

Special setup and paint charge will apply.

CONVERSION CHARTS

Cable Length Stellar, Atlas, & Galaxy Astro-Brac		
Cable Length	**Max Pole Diameter**	**Pole Dia w/ Ty-back**
62″	7.0″	4.5″
84″	10.5″	7.6″
96″	12.4″	9.6″
110″	14.6″	11.8″
120″	16.2″	13.4″
132″	18.2″	15.3″
144″	20.1″	17.2″
220″	32.2″	29.3″
280″	35.0″	35.0″

Band Length Stellar & Atlas Astro-Brac	
Band Length	**Max Pole Diameter**
29″	7.3″
42″	11.5″
56″	15.9″
72″	21.0″
114″	34.4″

Cable Length Mini-Brac & Triton Astro-Brac	
Cable Length	**Max Pole Diameter**
45″	11.1″
62″	16.6″
84″	22.0″

Band Length Mini-Brac & Triton Astro-Brac	
Band Length	**Max Pole Diameter**
29″	7.3″
42″	11.5″
56″	15.9″
72″	21.0″

Note:
Circumference to Diameter Conversion
Circumference ÷ pi = Diameter
Example: (12″ ÷ 3.14) = 3.82″

TUBE LENGTH Standard & Tri-Bolt Signals	
23″	1-section 12″
37″	2-section 12″ & 5-section cluster
46″	3-section 12″
58″	4-section 12″
74″	5-section 12″

TUBE LENGTH 1-1/2″ NPS OPS Signals	
50″	3-section 12″
66″	4-section 12″
82″	5-section 12″

TERMS & CONDITIONS

PAYMENT TERMS
Net 30 Days. A 1 1/2% per month (18% APR Service Charge) will be assessed on invoices whose payment has not been received within 45 days.

CREDIT CARD TERMS
We accept American Express, Mastercard, Visa, and Discover. A service fee of 3% will be added to all invoices. Credit Card will be charged prior to shipment.

CREDIT HOLD
Accounts over 90 Days will be placed on credit hold and remain so until brought current, including Service Charges. Orders on credit hold will be pulled from production and will only be rescheduled for shipment after release from credit hold.

MINIMUM BILLING
A $20.00 Minimum Service Charge will be assessed to each order for $50.00 or less.

F.O.B. POINT
Edmond, Oklahoma unless otherwise quoted.

PRICING
As stated in Price Schedule, *prices are subject to change without notice.*

QUOTATIONS
Pricing on quotations is firm for 30 days from date of quotation unless otherwise indicated. Please reference quotation when ordering.

CANCELLATIONS
Orders cancelled for stock items are subject to a restocking fee.
Orders cancelled for painted, custom, or non-stock items will be assessed at the time of the request.

CUSTOMER PICK UP
Customer pick up requests will be accommodated. A 10% service charge will apply if not picked up within 30 days of notification of completion of order.

SHIPMENT & DELIVERY
Pelco is very diligent in selecting the most competent and economical carrier. However, upon written request Pelco will use a carrier of your specific choice. See Shipping Notice, in the Reference Section page viii, for shipment specifics and freight claims.

RETURNED GOODS
In order to expedite handling, written authorization must accompany all returned goods. Upon request, a Returned Merchandise Authorization (RMA) will be issued and must be used. Use this RMA as a packing list when returning a shipment. A restocking fee plus freight charges shall be assessed against the return of goods unless return of goods was due to an error of Pelco.

REQUESTS FOR CERTIFICATIONS
Requests for certs must be made at the time your order is placed. Please reference certification type and product. Representative material test reports are available on request for most Pelco products. If your order contains materials that require lot or heat treat number traceability, or if the materials must be of domestic origin, those requirements must be clearly stated at the time your order is placed.

Shipping Notice included with each shipment:

NOTICE

SHIPMENTS MADE WITH FACTORY AS F.O.B. POINT

-CARRIER HAS ACCEPTED SHIPMENT IN GOOD CONDITION-
LOST OR DAMAGED GOODS ARE THE CARRIER'S RESPONSIBILITY in all shipments of this type.

PELCO'S Responsibility For This Shipment Has Now Ceased.

CHECK YOUR SHIPMENT CAREFULLY WHEN DELIVERED to see that it is in good order and received complete. When packages check short or are in bad condition, have the Carrier's agent make notation of this fact in detail on the freight bill or express receipt and then require that he sign it.

LOST OR DAMAGED GOODS ARE THE CARRIER'S RESPONSIBILITY in all LTL (less than truckload) shipments. In TL (truckload) shipments, the Carrier is responsible for damage to exposed surfaces of the goods (top and ends) caused by collision with other vehicles or objects when the Carrier is negligent, and by loading other freight on or against Pelco goods. When the trailer itself shows evidence of fresh damage, call at once for inspection of the contents just as though it were an LTL shipment.

CONCEALED LOSS OR DAMAGE DISCOVERED AFTER DELIVERY of shipment must be reported to the delivering Carrier upon discovery, and in any event within 15 days after receipt. Hold goods, containers, and packing materials in exact condition as found for inspection by the Carrier. An inspector for the Carrier should call within 48 hours. If nothing is heard in that time, notify them by registered mail and get a receipt. The Carrier will issue an inspection report and give you a copy which must be used to support your claim.

FAILURE TO COMPLY WITH ANY OF THE FOREGOING REGULATIONS IS REGARDED AS INDICATING COMPLETE DELIVERY OF FREIGHT IN GOOD CONDITION.

Make Your Claim Promptly
Carrier Will Not Consider a Claim Unless Presented Within 9 Months After Receipt of Shipment.

IMPORTANT!

DO NOT DEDUCT THE AMOUNT OF LOSS OR DAMAGE from Pelco invoice while awaiting adjustment of a claim, as we can not guarantee safe delivery for actions beyond our control.

Please do not return goods to Pelco or instruct Carriers to return goods without first securing written authorization and shipping instructions.

SHIPMENTS MADE WITH DESTINATION AS F.O.B. POINT

-CARRIER HAS ACCEPTED SHIPMENT IN GOOD CONDITION-

CHECK YOUR SHIPMENT CAREFULLY WHEN DELIVERED to see that it is in good order and received complete.

When packages check short or are in damaged condition, have the carriers agent make notation of this fact on the freight bill or express receipt, and then require that he sign it.

Check your shipment immediately to make sure the contents agree with the Pelco packing list enclosed and to determine if any damage has occurred during transit.

Any shortages and or concealed damages MUST be reported to Pelco within 10 DAYS.

FAILURE TO COMPLY WITH THE FOREGOING IS REGARDED AS AN INDICATION THAT YOUR SHIPMENT HAS ARRIVED IN SATISFACTORY CONDITION AND THAT IT IS COMPLETE AS SHOWN ON OUR PACKING LIST.

Please do not return damaged goods to Pelco without first securing authorization and shipping instructions.

Pelco will make every effort possible to effect prompt correction of any short or damaged goods when claims are made within these guidelines.

PELCO PRODUCTS, INC.
320 W. 18th St.
Edmond, OK 73013
(405)340-3434 FAX:(405)340-3435

ISO 9001
www.intlcert.com

WARRANTY

General: All statements, technical information and recommendations contained in Pelco Product Brochures and Bulletins are based on tests Pelco believes to be reliable. However, the accuracy or completeness thereof is not guaranteed and the following is made in lieu of all warranties, expressed or implied:

Limited Warranty: Pelco's only obligations shall be to replace such quantity of the product proven to be defective.

Repair or replacement of any product will be made at Pelco's facilities. The extent of repair or replacement is at Pelco's discretion. Transportation to and from Pelco's facilities is the responsibility of the buyer.

Pelco shall not be liable for injury, loss or damage direct or consequential arising out of the use of, or the inability to use the product. Before using, user shall determine the suitability of the product for his intended use, and assumes all risk and liability whatsoever in connection therewith. No statement or recommendation not contained herein shall have any effect unless in an agreement signed by the officers of Pelco Products Inc.

Warranty Period: Unless otherwise noted, standard product warranty is 12 months from date of shipment.

Contact Pelco for complete warranty details and exclusions.

1-Way Assemblies

Designed to accommodate all traffic signals, with the exception of optically programmed (see pages T1-18 through T1-21).
The Galaxy and Stellar Astro-Brac series feature all-axis adjustability and are designed to facilitate the mounting of any size signal to any shape mast arm or pole. The hinged clamping mechanism on the Galaxy provides for an easy convenient installation.

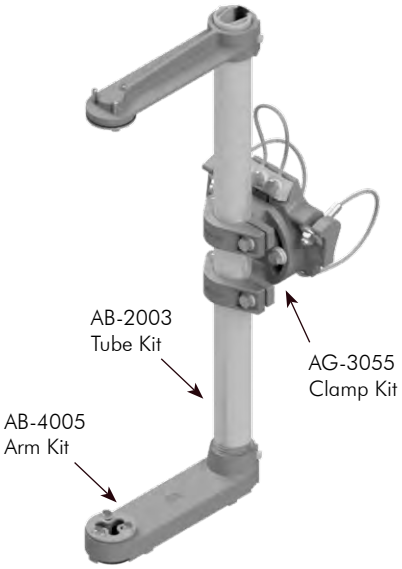

Galaxy 1-Way Assy, Cable Mount

AG-0125 - [Signal Section] - [Cable Length] - [Cable] - [Coating]

Signal Section	Cable Length	Cable	Coating
1=23″ Tube 2=37″ Tube 3=46″ Tube 4=58″ Tube 5=74″ Tube	See Table	Blank=Galv SS=Stainless	PNC=Process No Color P_ _=Paint

Cable Length:	62″	84″	96″	110″	120″	132″	144″	220″	280″
Maximum Pole Dia:	7.0″	10.5″	12.4″	14.6″	16.2″	18.2″	20.1″	32.2″	35.0″

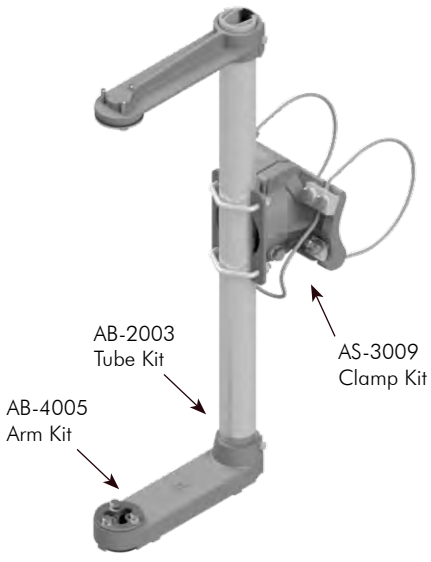

Stellar 1-Way Assy, Cable Mount

AS-0125 - [Signal Section] - [Cable Length] - [Cable] - [Coating]

Signal Section	Cable Length	Cable	Coating
1=23″ Tube 2=37″ Tube 3=46″ Tube 4=58″ Tube 5=74″ Tube	See Table	Blank=Galv SS=Stainless	PNC=Process No Color P_ _=Paint

Cable Length:	62″	84″	96″	110″	120″	132″	144″	220″	280″
Maximum Pole Dia:	7.0″	10.5″	12.4″	14.6″	16.2″	18.2″	20.1″	32.2″	35.0″
Pole Dia w/ Ty-back:	4.5″	7.6″	9.6″	11.8″	13.4″	15.3″	17.2″	29.3″	35.0″

Note: 1. All assemblies are supplied standard with stainless steel slotted washers and fasteners.
2. See Reference Section page vi for cable, band, and tube length information.
3. See Reference Section page v for available paint colors.

1-Way Assemblies

Designed to accommodate all traffic signals, with the exception of optically programmed (see pages T1-18 through T1-21).
The Galaxy and Stellar Astro-Brac series feature all-axis adjustability and are designed to facilitate the mounting of any size signal to any shape mast arm or pole. The hinged clamping mechanism on the Galaxy provides for an easy convenient installation.

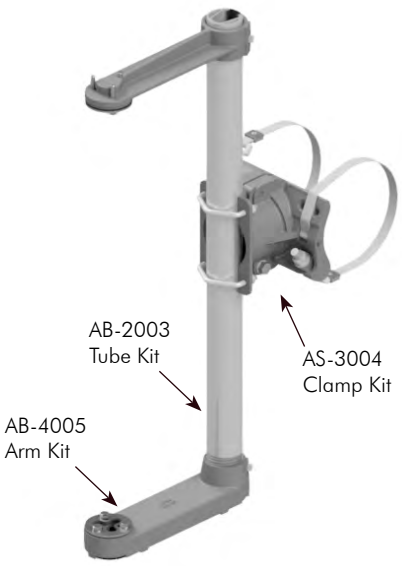

Stellar 1-Way Assy, Band Mount

AS-0116 - [Signal Section] - [Band Length] - [Coating]

Signal Section:
1=23″ Tube
2=37″ Tube
3=46″ Tube
4=58″ Tube
5=74″ Tube

Band Length: See Table

Coating:
PNC=Process No Color
P_ _=Paint

Band Length:	29″	42″	56″	72″	114″
Maximum Pole Dia:	7.3″	11.5″	15.9″	21.0″	34.4″

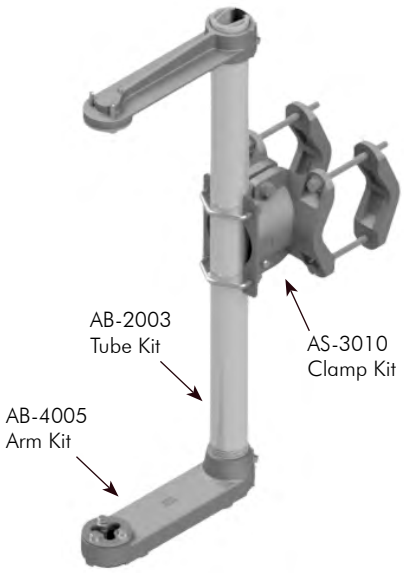

Stellar 1-Way Assy, Tenon Mount

AS-0137 - [Signal Section] - [Coating]

Signal Section:
1=23″ Tube
2=37″ Tube
3=46″ Tube
4=58″ Tube
5=74″ Tube

Coating:
PNC=Process No Color
P_ _=Paint

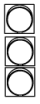

Note:
Fits 1.9″ to 4.5″ diameter.

Note: 1. All assemblies are supplied standard with stainless steel slotted washers and fasteners.
2. See Reference Section page vi for cable, band, and tube length information.
3. See Reference Section page v for available paint colors.

1-Way Horizontal Assemblies

The Astro-Brac easily adapts to mount signals horizontally from a mast arm. The Stellar series all-axis adjustability allows for unique alignment of the signal. Available in both cable and band mount.

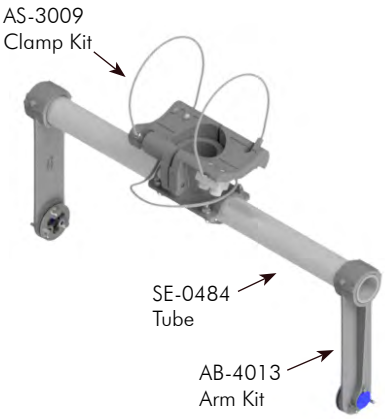

Stellar 1-Way Horizontal Assy, Cable Mount

AS-0194 - [Signal Section] - [Cable Length] - [Cable] - [Coating]

Signal Section	Cable Length	Cable	Coating
1=23″ Tube 2=37″ Tube 3=46″ Tube 4=58″ Tube 5=74″ Tube	See Table	Blank=Galv SS=Stainless	PNC=Process No Color P_ _=Paint

Cable Length:	62″	84″	96″	110″	120″	132″	144″	220″	280″
Maximum Pole Dia:	7.0″	10.5″	12.4″	14.6″	16.2″	18.2″	20.1″	32.2″	35.0″
Pole Dia w/ Ty-back:	4.5″	7.6″	9.6″	11.8″	13.4″	15.3″	17.2″	29.3″	35.0″

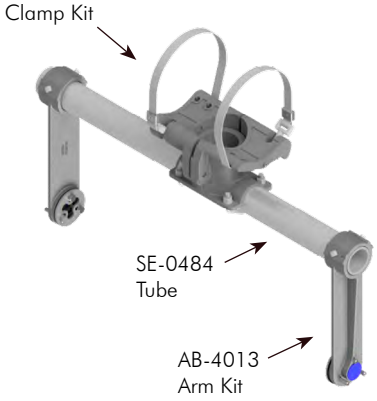

Stellar 1-Way Horizontal Assy, Band Mount

AS-0124 - [Signal Section] - [Band Length] - [Coating]

Signal Section	Band Length	Coating
1=23″ Tube 2=37″ Tube 3=46″ Tube 4=58″ Tube 5=74″ Tube	See Table	PNC=Process No Color P_ _=Paint

Band Length:	29″	42″	56″	72″	114″
Maximum Pole Dia:	7.3″	11.5″	15.9″	21.0″	34.4″

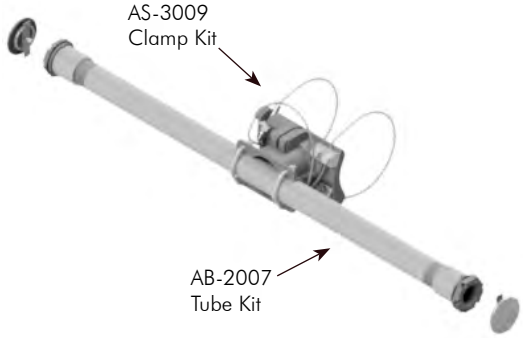

Stellar 1-Way Horizontal Assy w/ Signal Closures, Cable Mount

AS-0684 - [Tube Length] - [Cable Length] - [Cable] - [Coating]

Tube Length	Cable Length	Cable	Coating
24=24″ Tube 36=24″ Tube 48=48″ Tube	See Table	Blank=Galv SS=Stainless	PNC=Process No Color P_ _=Paint

Cable Length:	62″	84″	96″	110″	120″	132″	144″	220″	280″
Maximum Pole Dia:	7.0″	10.5″	12.4″	14.6″	16.2″	18.2″	20.1″	32.2″	35.0″
Pole Dia w/ Ty-back:	4.5″	7.6″	9.6″	11.8″	13.4″	15.3″	17.2″	29.3″	35.0″

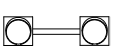

Note: 1. All assemblies are supplied standard with stainless steel slotted washers and fasteners.
2. See Reference Section page vi for cable, band, and tube length information.
3. See Reference Section page v for available paint colors.

1-Way Articulating Assemblies

The Atlas Astro-Brac series is capable of concealing one 3/4" diamenter or two 5/8" diameter conduits. The internal wiring capability and 3 axis of adjustability can handle even the toughest alignment problems, making this system truly universal. Available in cable, band, and tenon mount.

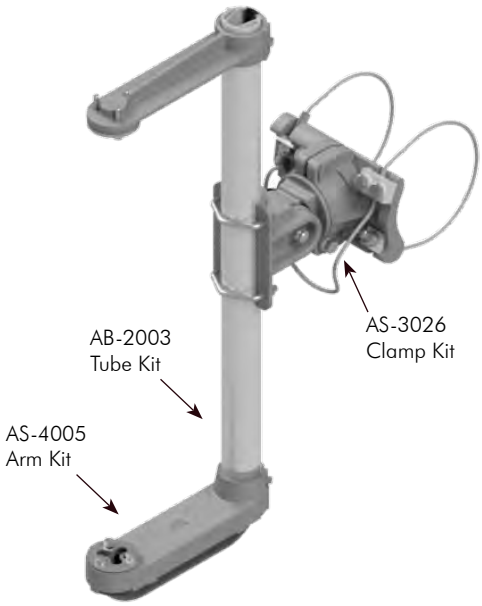

Atlas 1-Way Articulating Assy, Cable Mount

AS-0150 - [Signal Section] - [Cable Length] - [Cable] - [Coating]

Signal Section: 1=23" Tube, 2=37" Tube, 3=46" Tube, 4=58" Tube, 5=74" Tube

Cable Length: See Table

Cable: Blank=Galv, SS=Stainless

Coating: PNC=Process No Color, P_ _=Paint

Cable Length:	62"	84"	96"	110"	120"	132"	144"	220"	280"
Maximum Pole Dia:	7.0"	10.5"	12.4"	14.6"	16.2"	18.2"	20.1"	32.2"	35.0"
Pole Dia w/ Ty-back:	4.5"	7.6"	9.6"	11.8"	13.4"	15.3"	17.2"	29.3"	35.0"

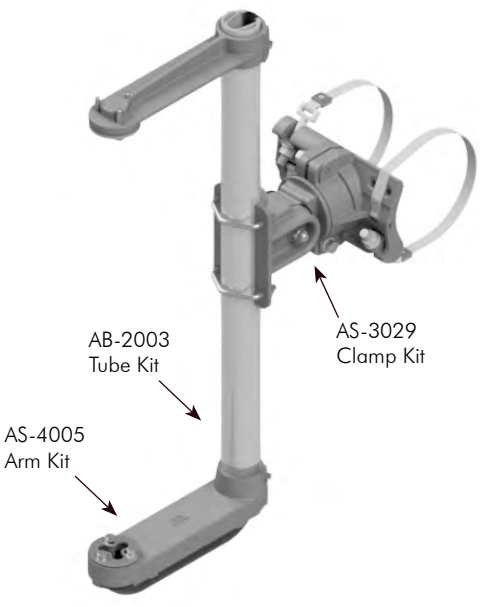

Atlas 1-Way Articulating Assy, Band Mount

AS-0153 - [Signal Section] - [Band Length] - [Coating]

Signal Section: 1=23" Tube, 2=37" Tube, 3=46" Tube, 4=58" Tube, 5=74" Tube

Band Length: See Table

Coating: PNC=Process No Color, P_ _=Paint

Band Length:	29"	42"	56"	72"	114"
Maximum Pole Dia:	7.3"	11.5"	15.9"	21.0"	34.4"

Note: 1. All assemblies are supplied standard with stainless steel slotted washers and fasteners.
2. See Reference Section page vi for cable, band, and tube length information.
3. See Reference Section page v for available paint colors.

1-Way Articulating Assemblies

The Atlas Astro-Brac series is capable of concealing one 3/4" diamenter or two 5/8" diameter conduits. The internal wiring capability and 3 axis of adjustability can handle even the toughest alignment problems, making this system truly universal. Available in cable, band, and tenon mount.

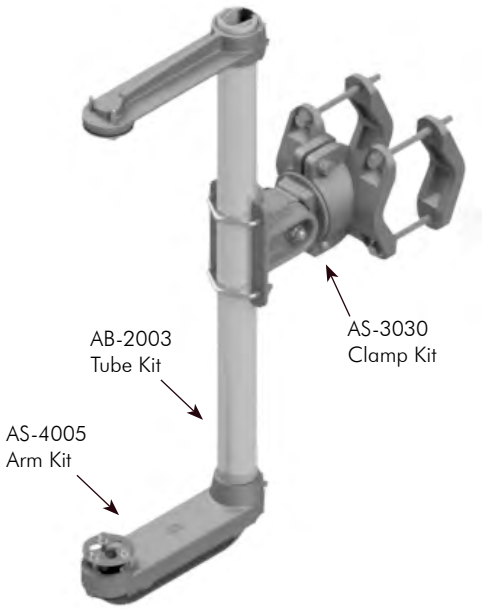

Atlas 1-Way Articulating Assy, Tenon Mount

		Signal Section		Coating
AS-0154	-	☐	-	☐

1=23" Tube
2=37" Tube
3=46" Tube
4=58" Tube
5=74" Tube

PNC=Process No Color
P__=Paint

Note:
Fits 1.9" to 4.5" diameter.

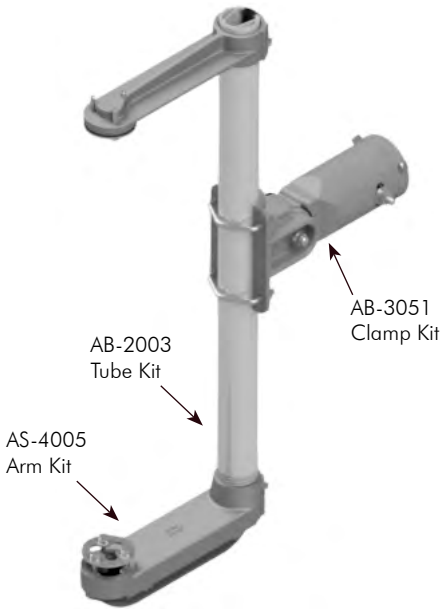

Atlas 1-Way Articulating Assy, Tenon Mount

		Signal Section		Coating
AS-0149	-	☐	-	☐

1=23" Tube
2=37" Tube
3=46" Tube
4=58" Tube
5=74" Tube

PNC=Process No Color
P__=Paint

Note:
Fits 1.9" diameter.

Note: 1. All assemblies are supplied standard with stainless steel slotted washers and fasteners.
2. See Reference Section page vi for cable, band, and tube length information.
3. See Reference Section page v for available paint colors.

This page is intentionally left blank.

2-Way Assemblies

Designed to accommodate all traffic signals, with the exception of optically programmed. The Galaxy and Stellar Astro-Brac series feature all-axis adjustability and are designed to facilitate the mounting of 2-way signals on any shape of mast arm or pole. The hinged clamping mechanism on the Galaxy provides for an easy convenient installation.

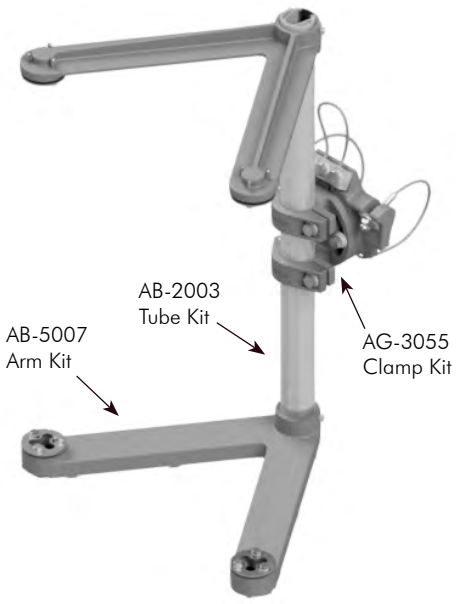

Galaxy 2-Way Assy, Cable Mount

AG-0188 - [Signal Section] - [Cable Length] - [Cable] - [Coating]

Signal Section: 1=23″ Tube, 2=37″ Tube, 3=46″ Tube, 4=58″ Tube, 5=74″ Tube

Cable Length: See Table

Cable: Blank=Galv, SS=Stainless

Coating: PNC=Process No Color, P_ _=Paint

Cable Length:	62″	84″	96″	110″	120″	132″	144″	220″	280″
Maximum Pole Dia:	7.0″	10.5″	12.4″	14.6″	16.2″	18.2″	20.1″	32.2″	35.0″
Pole Dia w/ Ty-back:	4.5″	7.6″	9.6″	11.8″	13.4″	15.3″	17.2″	29.3″	35.0″

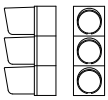

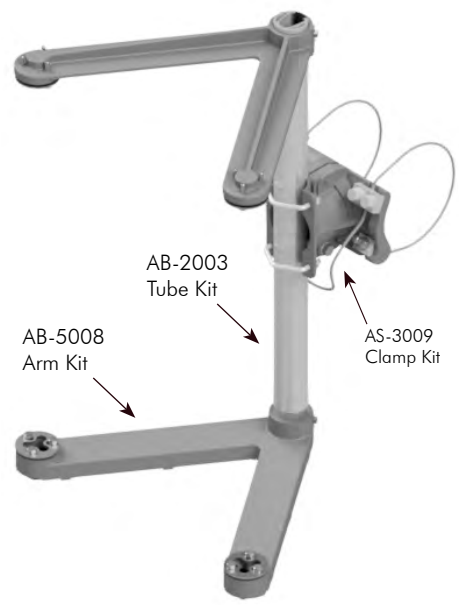

Stellar 2-Way Assy, Cable Mount

AS-0188 - [Signal Section] - [Cable Length] - [Cable] - [Coating]

Signal Section: 1=23″ Tube, 2=37″ Tube, 3=46″ Tube, 4=58″ Tube, 5=74″ Tube

Cable Length: See Table

Cable: Blank=Galv, SS=Stainless

Coating: PNC=Process No Color, P_ _=Paint

Cable Length:	62″	84″	96″	110″	120″	132″	144″	220″	280″
Maximum Pole Dia:	7.0″	10.5″	12.4″	14.6″	16.2″	18.2″	20.1″	32.2″	35.0″
Pole Dia w/ Ty-back:	4.5″	7.6″	9.6″	11.8″	13.4″	15.3″	17.2″	29.3″	35.0″

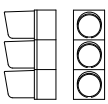

Note: 1. All assemblies are supplied standard with stainless steel slotted washers and fasteners.
2. See Reference Section page vi for cable, band, and tube length information.
3. See Reference Section page v for available paint colors.

2-Way Assemblies

Designed to accommodate all traffic signals, with the exception of optically programmed. The Galaxy and Stellar Astro-Brac series feature all-axis adjustability and are designed to facilitate the mounting of 2-way signals on any shape of mast arm or pole. The hinged clamping mechanism on the Galaxy provides for an easy convenient installation.

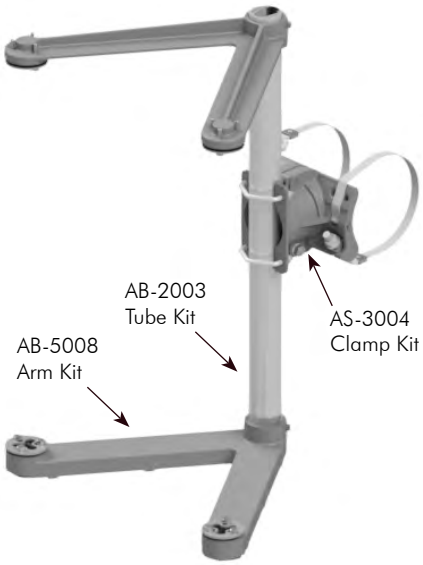

Stellar 2-Way Assy, Band Mount

AS-0110 - [Signal Section] - [Band Length] - [Clamp Screw] - [Coating]

Signal Section	Band Length	Clamp Screw	Coating
1=23″ Tube 2=37″ Tube 3=46″ Tube 4=58″ Tube 5=74″ Tube	See Table	Blank=Galv SS=Stainless	PNC=Process No Color P_ _=Paint

Band Length:	29″	42″	56″	72″	114″
Maximum Pole Dia:	7.3″	11.5″	15.9″	21.0″	34.4″

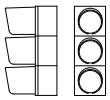

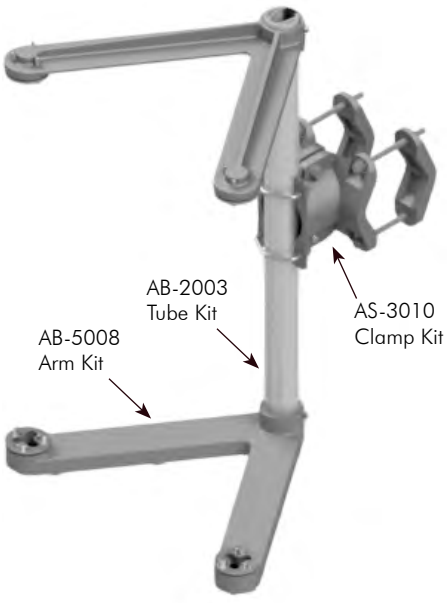

Stellar 2-Way Assy, Tenon Mount

AS-0641 - [Signal Section] - [Coating]

Signal Section	Coating
1=23″ Tube 2=37″ Tube 3=46″ Tube 4=58″ Tube 5=74″ Tube	PNC=Process No Color P_ _=Paint

Note:
Fits 1.9″ to 4.5″ diameter.

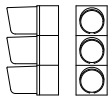

Note: 1. All assemblies are supplied standard with stainless steel slotted washers and fasteners.
2. See Reference Section page vi for cable, band, and tube length information.
3. See Reference Section page v for available paint colors.

2-Way Assemblies

Designed to accommodate all traffic signals, with the exception of optically programmed. This Stellar Astro-Brac assembly features all-axis adjustability and is designed to facilitate the mounting of 2-way signals back-to-back on any shape of mast arm or pole.

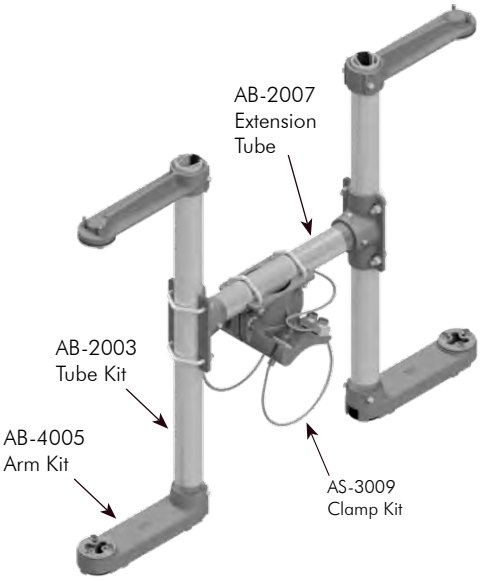

Stellar Adjustable 2-Way Assy w/ Extension Tube, Cable Mount

	Signal Section		Extension Tube		Cable Length		Cable		Coating
AS-0700 -	[ ]	-	[ ]	-	[ ]	-	[ ]	-	[ ]
	1=23″ Tube 2=37″ Tube 3=46″ Tube 4=58″ Tube 5=74″ Tube		12=12″ Tube 14=14″ Tube 16=16″ Tube		See Table		Blank=Galv SS=Stainless		PNC=Process No Color P_ _=Paint

Cable Length:	62″	84″	96″	110″	120″	132″	144″	220″	280″
Maximum Pole Dia:	7.0″	10.5″	12.4″	14.6″	16.2″	18.2″	20.1″	32.2″	35.0″
Pole Dia w/ Ty-back:	4.5″	7.6″	9.6″	11.8″	13.4″	15.3″	17.2″	29.3″	35.0″

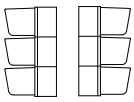

Note: 1. All assemblies are supplied standard with stainless steel slotted washers and fasteners.
2. See Reference Section page vi for cable, band, and tube length information.
3. See Reference Section page v for available paint colors.

2-Way Variable Assemblies

Designed to accommodate all traffic signals, with the exception of optically programmed. The Galaxy and Stellar 2-Way variable assembly feature all-axis adjustability and is designed to facilitate the mounting of unbalanced signal combinations to any shape mast arm or pole. The hinged clamping mechanism on the Galaxy provides for an easy convenient installation.

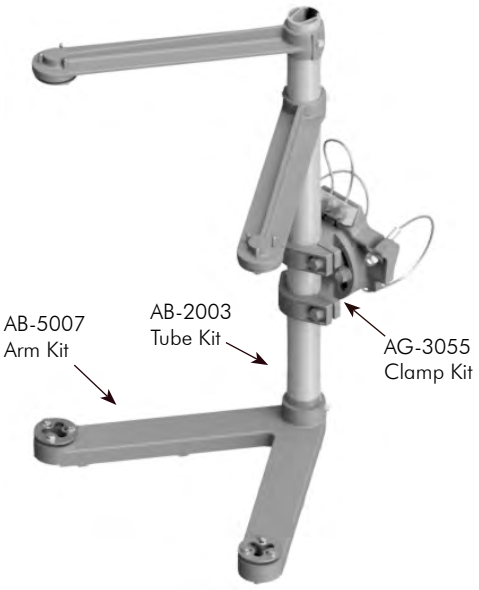

Galaxy 2-Way Variable Assy, Cable Mount

AG-0193 - [Signal Section] - [Cable Length] - [Cable] - [Coating]

Signal Section	Cable Length	Cable	Coating
3=46″ Tube 4=58″ Tube 5=74″ Tube	See Table	Blank=Galv SS=Stainless	PNC=Process No Color P_ _=Paint

Cable Length:	62″	84″	96″	110″	120″	132″	144″	220″	280″
Maximum Pole Dia:	7.0″	10.5″	12.4″	14.6″	16.2″	18.2″	20.1″	32.2″	35.0″
Pole Dia w/ Ty-back:	4.5″	7.6″	9.6″	11.8″	13.4″	15.3″	17.2″	29.3″	35.0″

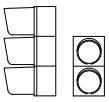

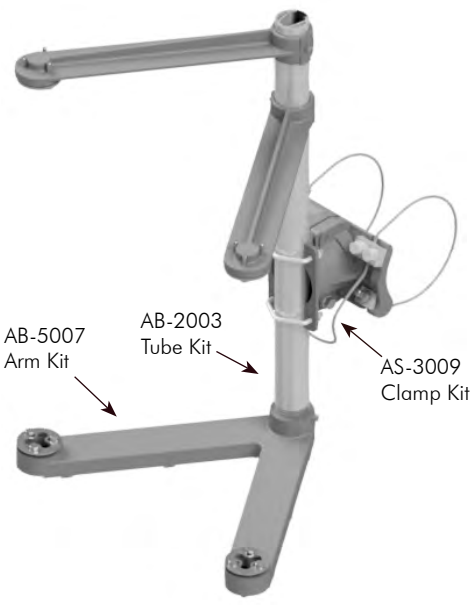

Stellar 2-Way Variable Assy, Cable Mount

AS-0193 - [Signal Section] - [Cable Length] - [Cable] - [Coating]

Signal Section	Cable Length	Cable	Coating
3=46″ Tube 4=58″ Tube 5=74″ Tube	See Table	Blank=Galv SS=Stainless	PNC=Process No Color P_ _=Paint

Cable Length:	62″	84″	96″	110″	120″	132″	144″	220″	280″
Maximum Pole Dia:	7.0″	10.5″	12.4″	14.6″	16.2″	18.2″	20.1″	32.2″	35.0″
Pole Dia w/ Ty-back:	4.5″	7.6″	9.6″	11.8″	13.4″	15.3″	17.2″	29.3″	35.0″

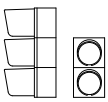

Note: 1. All assemblies are supplied standard with stainless steel slotted washers and fasteners.
2. See Reference Section page vi for cable, band, and tube length information.
3. See Reference Section page v for available paint colors.

ISO 9001 www.intlcert.com

Aero-Brac
pelco PELCO PRODUCTS, INC.

2-Way Variable Assemblies

Designed to accommodate all traffic signals, with the exception of optically programmed. The Galaxy and Stellar 2-Way variable assembly feature all-axis adjustability and is designed to facilitate the mounting of unbalanced signal combinations to any shape mast arm or pole. The hinged clamping mechanism on the Galaxy provides for an easy convenient installation.

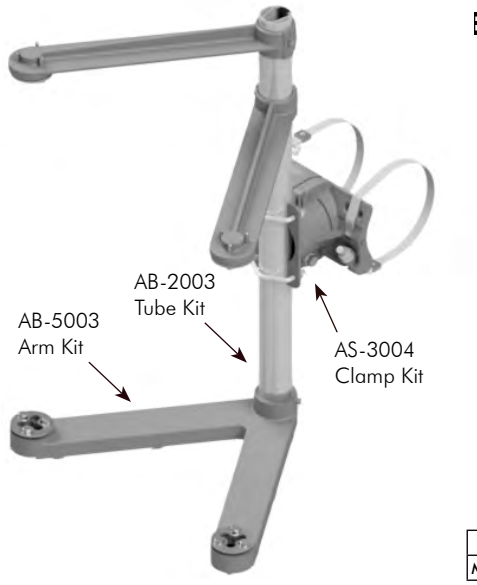

Stellar 2-Way Variable Assy, Band Mount

AS-0111 - [Signal Section] - [Band Length] - [Coating]

Signal Section: 3=46″ Tube, 4=58″ Tube, 5=74″ Tube

Band Length: See Table

Coating: PNC=Process No Color, P_ _=Paint

Band Length:	29″	42″	56″	72″	114″
Maximum Pole Dia:	7.3″	11.5″	15.9″	21.0″	34.4″

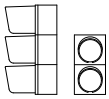

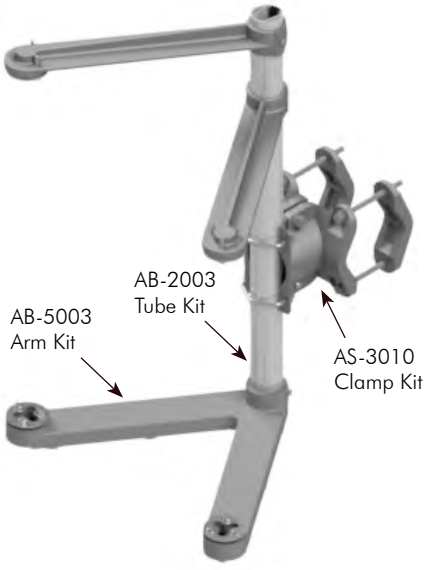

Stellar 2-Way Variable Assy, Tenon Mount

AS-0642 - [Signal Section] - [Coating]

Signal Section: 3=46″ Tube, 4=58″ Tube, 5=74″ Tube

Coating: PNC=Process No Color, P_ _=Paint

Note:
Fits 1.9″ to 4.5″ diameter.

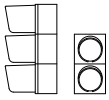

Note: 1. All assemblies are supplied standard with stainless steel slotted washers and fasteners.
2. See Reference Section page vi for cable, band, and tube length information.
3. See Reference Section page v for available paint colors.

Cluster Assemblies

Designed to accommodate all traffic signals, with the exception of optically programmed. The Galaxy and Stellar cluster mount features all-axis adjustability and is designed to facilitate the mounting of 5-section signal heads to any shape mast arm or pole. The hinged clamping mechanism on the Galaxy provides for an easy convenient installation.

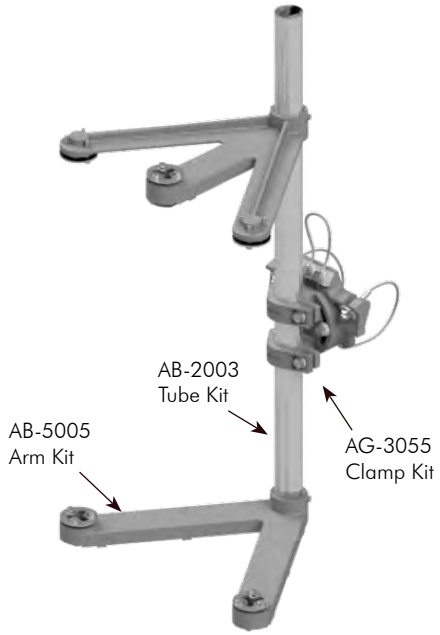

Galaxy 5-Sec Cluster Assy, Cable Mount

AG-0138 - [Cable Length] - [Cable] - [Coating]

Cable Length: See Table
Cable: Blank=Galv, SS=Stainless
Coating: PNC=Process No Color, P_ _=Paint

Cable Length:	62″	84″	96″	110″	120″	132″	144″	220″	280″
Maximum Pole Dia:	7.0″	10.5″	12.4″	14.6″	16.2″	18.2″	20.1″	32.2″	35.0″
Pole Dia w/ Ty-back:	4.5″	7.6″	9.6″	11.8″	13.4″	15.3″	17.2″	29.3″	35.0″

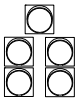

Stellar 5-Sec Cluster Assy, Cable Mount

AS-0138 - [Cable Length] - [Cable] - [Coating]

Cable Length: See Table
Cable: Blank=Galv, SS=Stainless
Coating: PNC=Process No Color, P_ _=Paint

Cable Length:	62″	84″	96″	110″	120″	132″	144″	220″	280″
Maximum Pole Dia:	7.0″	10.5″	12.4″	14.6″	16.2″	18.2″	20.1″	32.2″	35.0″
Pole Dia w/ Ty-back:	4.5″	7.6″	9.6″	11.8″	13.4″	15.3″	17.2″	29.3″	35.0″

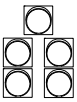

Note: 1. All assemblies are supplied standard with stainless steel slotted washers and fasteners.
2. See Reference Section page vi for cable, band, and tube length information.
3. See Reference Section page v for available paint colors.

Cluster Assemblies

Designed to accommodate all traffic signals, with the exception of optically programmed. The Galaxy and Stellar cluster mount features all-axis adjustability and is designed to facilitate the mounting of 5-section signal heads to any shape mast arm or pole. The hinged clamping mechanism on the Galaxy provides for an easy convenient installation.

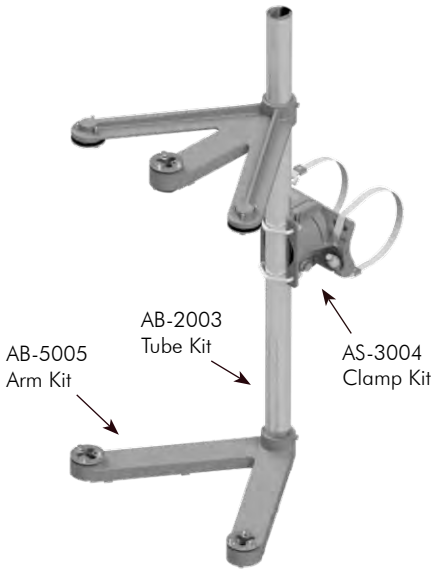

Stellar 5-Sec Cluster Assy, Band Mount

AS-0109 - [Band Length] - [Coating]

Band Length: See Table

Coating: PNC=Process No Color, P_ _=Paint

Band Length:	29″	42″	56″	72″	114″
Maximum Pole Dia:	7.3″	11.5″	15.9″	21.0″	34.4″

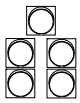

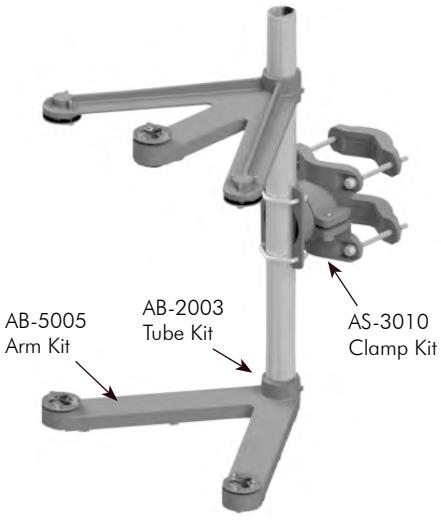

Stellar 5-Sec Cluster Assy, Tenon Mount

AS-0190 - [Coating]

Coating: PNC=Process No Color, P_ _=Paint

Note:
Fits 1.9″ to 4.5″ diameter.

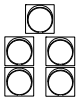

Note: 1. All assemblies are supplied standard with stainless steel slotted washers and fasteners.
2. See Reference Section page vi for cable, band, and tube length information.
3. See Reference Section page v for available paint colors.

Cluster Assemblies

The Atlas articulating series of Astro-Brac can conceal one 3/4″ diameter or two 5/8″ diameter conduits. The cluster assemblies are designed to mount 5-section heads to any shape of mast arm or pole. The internal wiring capability and 3 axis of adjustability can handle even the toughest alignment problems, making this system truly universal. Available in cable, band, and tenon mount.

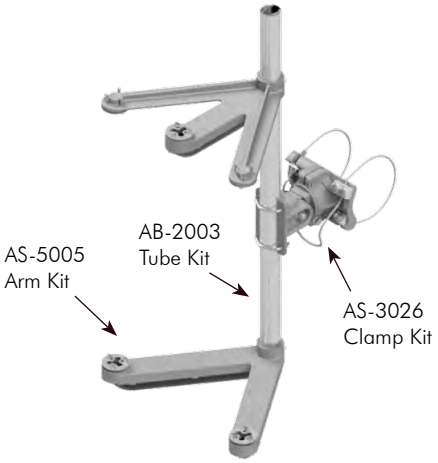

Atlas 5-Sec Cluster Articulating Assy, Cable Mount

AS-0162 - [Cable Length] - [Cable] - [Coating]

Cable Length: See Table
Cable: Blank=Galv, SS=Stainless
Coating: PNC=Process No Color, P_ _=Paint

Cable Length:	62″	84″	96″	110″	120″	132″	144″	220″	280″
Maximum Pole Dia:	7.0″	10.5″	12.4″	14.6″	16.2″	18.2″	20.1″	32.2″	35.0″
Pole Dia w/ Ty-back:	4.5″	7.6″	9.6″	11.8″	13.4″	15.3″	17.2″	29.3″	35.0″

Atlas 5-Sec Cluster Articulating Assy, Band Mount

AS-0675 - [Band Length] - [Coating]

Band Length: See Table
Coating: PNC=Process No Color, P_ _=Paint

Band Length:	29″	42″	56″	72″	114″
Maximum Pole Dia:	7.3″	11.5″	15.9″	21.0″	34.4″

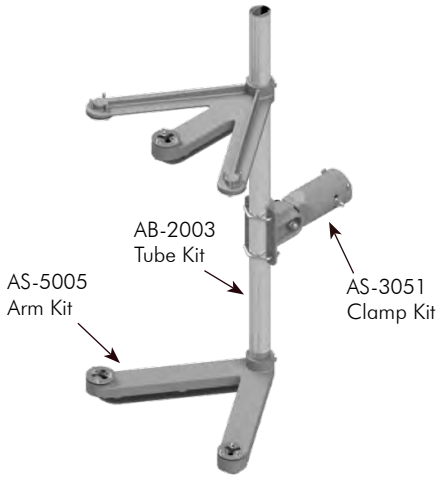

Atlas 5-Sec Cluster Articulating Assy, Tenon Mount

AS-0187 - [Coating]

Coating: PNC=Process No Color, P_ _=Paint

Note:
Fits 1.9″ diameter.

Note: 1. All assemblies are supplied standard with stainless steel slotted washers and fasteners.
2. See Reference Section page vi for cable, band, and tube length information.
3. See Reference Section page v for available paint colors.

Cluster Assemblies

Designed to accommodate all traffic signals, with the exception of the optically programmed. The cluster assembly with cast uppers is designed to mount 3, 4 or 5-section clusters in various configurations, to any size of mast arm or pole. The hinged clamping mechanism on the Galaxy provides for an easy convenient installation.

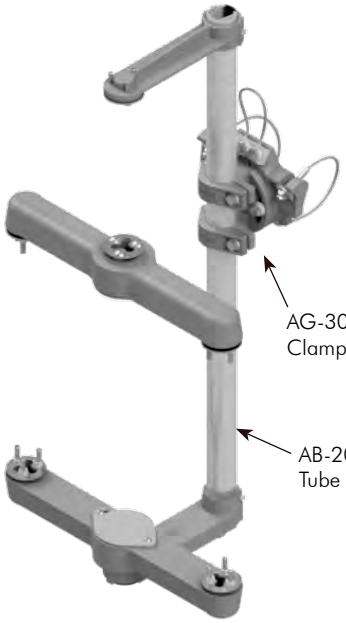

Galaxy Cluster Assy, w/ 17" CTC Cast Uppers Cable Mount

AG-0168 - [Cable Length] - [Cable] - [Coating]

Cable Length	See Table
Cable	Blank=Galv SS=Stainless
Coating	PNC=Process No Color P_ _=Paint

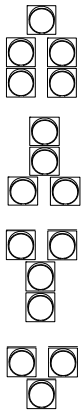

Cable Length:	62"	84"	96"	110"	120"	132"	144"	220"	280"
Maximum Pole Dia:	7.0"	10.5"	12.4"	14.6"	16.2"	18.2"	20.1"	32.2"	35.0"
Pole Dia w/ Ty-back:	4.5"	7.6"	9.6"	11.8"	13.4"	15.3"	17.2"	29.3"	35.0"

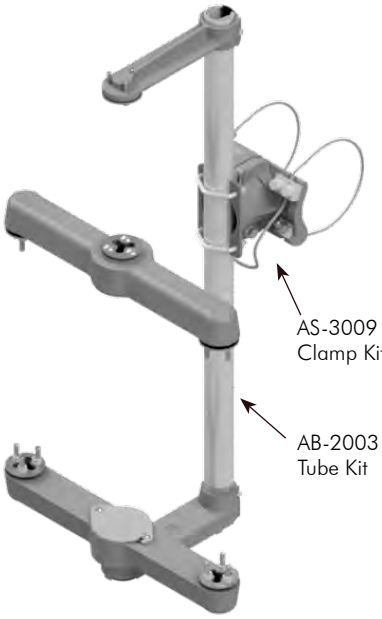

Stellar Cluster Assy, w/ 17" CTC Cast Uppers Cable Mount

AS-0168 - [Cable Length] - [Cable] - [Coating]

Cable Length	See Table
Cable	Blank=Galv SS=Stainless
Coating	PNC=Process No Color P_ _=Paint

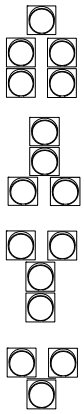

Cable Length:	62"	84"	96"	110"	120"	132"	144"	220"	280"
Maximum Pole Dia:	7.0"	10.5"	12.4"	14.6"	16.2"	18.2"	20.1"	32.2"	35.0"
Pole Dia w/ Ty-back:	4.5"	7.6"	9.6"	11.8"	13.4"	15.3"	17.2"	29.3"	35.0"

Note: 1. All assemblies are supplied standard with stainless steel slotted washers and fasteners.
2. See Reference Section page vi for cable, band, and tube length information.
3. See Reference Section page v for available paint colors.

ISO 9001 www.intlcert.com

Cluster Assemblies

Designed to accommodate all traffic signals, with the exception of the optically programmed. The cluster assembly with cast uppers is designed to mount 3, 4 or 5-section clusters in various configurations, to any size of mast arm or pole. The hinged clamping mechanism on the Galaxy provides for an easy convenient installation.

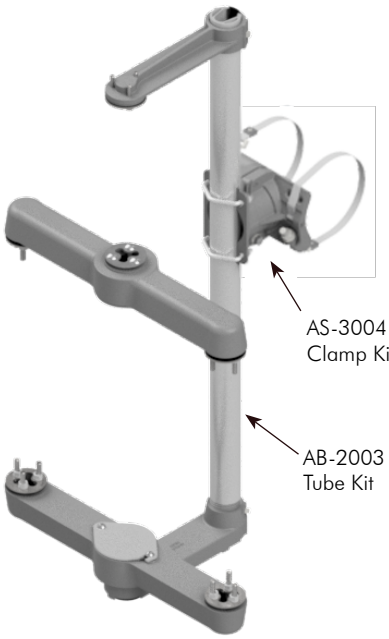

Stellar Cluster Assy, w/ 17" CTC Cast Uppers Band Mount

AS-0167 - [Band Length] - [Coating]

Band Length: See Table

Coating: PNC=Process No Color, P_ _=Paint

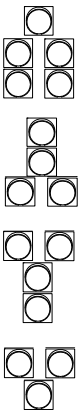

Band Length:	29"	42"	56"	72"	114"
Maximum Pole Dia:	7.3"	11.5"	15.9"	21.0"	34.4"

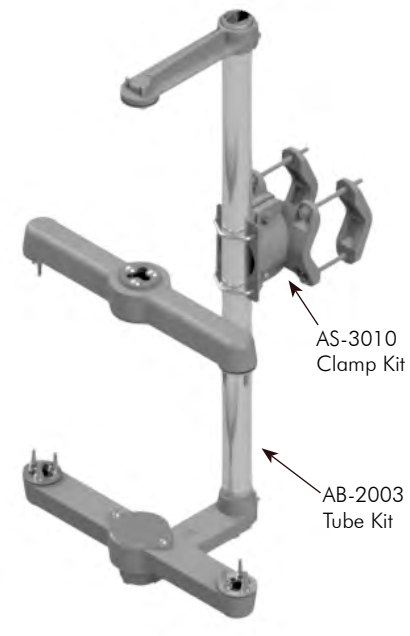

Stellar Cluster Assy, w/ 17" CTC Cast Uppers Tenon Mount

AS-0679 - [Coating]

Coating: PNC=Process No Color, P_ _=Paint

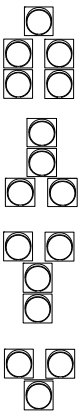

Note:
Fits 1.9" to 4.5" diameter.

Note: 1. All assemblies are supplied standard with stainless steel slotted washers and fasteners.
2. See Reference Section page vi for cable, band, and tube length information.
3. See Reference Section page v for available paint colors.

Cluster Assemblies

Designed to accommodate all traffic signals, with the exception of the optically programmed. This Galaxy assembly is designed to mount a Hawk 3-section cluster configuration to any size of mast arm or pole. The hinged clamping mechanism on the Galaxy provides for an easy convenient installation.

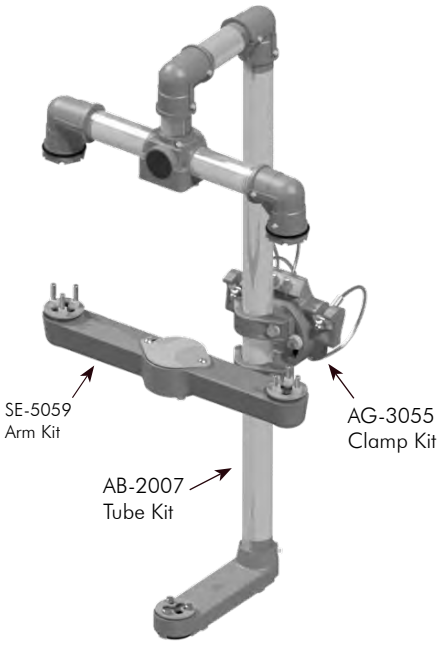

Galaxy Cluster 1-Way Hawk Assy, 17" CTC Cable Mount

	Cable Length		Cable		Coating
AG-0705-	[ ]	-	[ ]	-	[ ]
	See Table		Blank=Galv SS=Stainless		PNC=Process No Color P_ _=Paint

Cable Length:	62"	84"	96"	110"	120"	132"	144"	220"	280"
Maximum Pole Dia:	7.0"	10.5"	12.4"	14.6"	16.2"	18.2"	20.1"	32.2"	35.0"
Pole Dia w/ Ty-back:	4.5"	7.6"	9.6"	11.8"	13.4"	15.3"	17.2"	29.3"	35.0"

Note: 1. All assemblies are supplied standard with stainless steel slotted washers and fasteners.
2. See Reference Section page vi for cable, band, and tube length information.
3. See Reference Section page v for available paint colors.

1-Way Pedestrian Assemblies

With the extended arms this bracket assembly is designed to accommodate the pedestrian signal. The Stellar Astro-Brac features all-axis adjustability and is designed to facilitate the mounting of a ped signal to any shape pole.

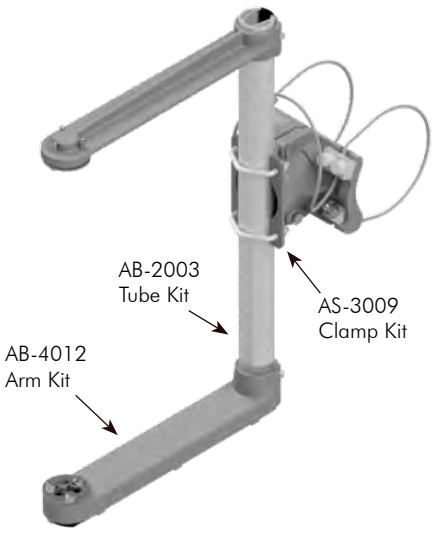

Stellar 1-Way ICC Ped Head Assy, Cable Mount

AS-0157 - [Cable Length] - [Cable] - [Coating]

Cable Length	Cable	Coating
See Table	Blank=Galv SS=Stainless	PNC=Process No Color P_ _=Paint

Cable Length:	62″	84″	96″	110″	120″	132″	144″	220″	280″
Maximum Pole Dia:	7.0″	10.5″	12.4″	14.6″	16.2″	18.2″	20.1″	32.2″	35.0″
Pole Dia w/ Ty-back:	4.5″	7.6″	9.6″	11.8″	13.4″	15.3″	17.2″	29.3″	35.0″

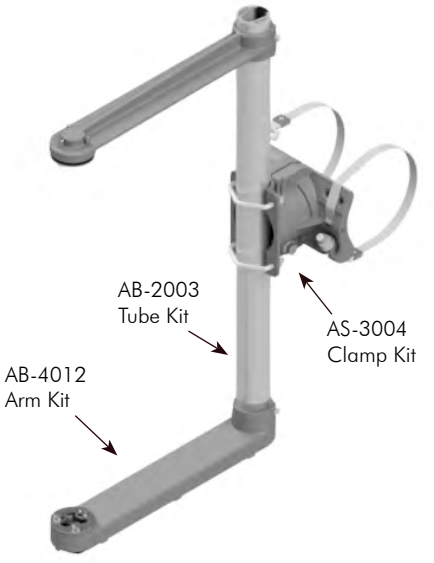

Stellar 1-Way ICC Ped Head Assy, Band Mount

AS-0133 - [Band Length] - [Coating]

Band Length	Coating
See Table	PNC=Process No Color P_ _=Paint

Band Length:	29″	42″	56″	72″	114″
Maximum Pole Dia:	7.3″	11.5″	15.9″	21.0″	34.4″

Note: 1. All assemblies are supplied standard with stainless steel slotted washers and fasteners.
2. See Reference Section page vi for cable, band, and tube length information.
3. See Reference Section page v for available paint colors.

ISO 9001 www.intlcert.com

Astro-Brac
pelco PELCO PRODUCTS, INC.

2-Way Pedestrian Assemblies

With the extended arms this bracket assembly is designed to accommodate the pedestrian signal. The Stellar Astro-Brac features all-axis adjustability and is designed to facilitate the mounting of two ped signals to any shape pole.

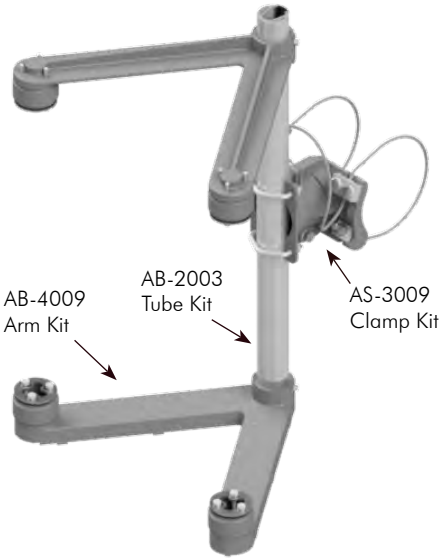

Stellar 2-Way ICC Ped Heads Assy, Cable Mount

AS-0158 - [Cable Length] - [Cable] - [Coating]

Cable Length: See Table
Cable: Blank=Galv, SS=Stainless
Coating: PNC=Process No Color, P_ _=Paint

Cable Length:	62″	84″	96″	110″	120″	132″	144″	220″	280″
Maximum Pole Dia:	7.0″	10.5″	12.4″	14.6″	16.2″	18.2″	20.1″	32.2″	35.0″
Pole Dia w/ Ty-back:	4.5″	7.6″	9.6″	11.8″	13.4″	15.3″	17.2″	29.3″	35.0″

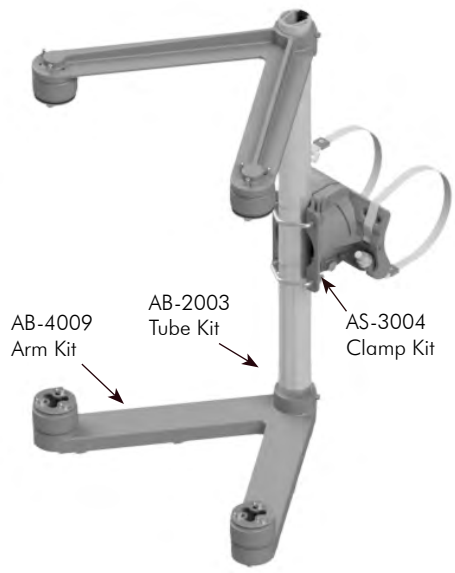

Stellar 2-Way ICC Ped Heads Assy, Band Mount

AS-0131 - [Band Length] - [Coating]

Band Length: See Table
Coating: PNC=Process No Color, P_ _=Paint

Band Length:	29″	42″	56″	72″	114″
Maximum Pole Dia:	7.3″	11.5″	15.9″	21.0″	34.4″

Note: 1. All assemblies are supplied standard with stainless steel slotted washers and fasteners.
2. See Reference Section page vi for cable, band, and tube length information.
3. See Reference Section page v for available paint colors.

1-Way OPS Assemblies

Designed to accommodate optically programmed signal heads. The Galaxy and Stellar Astro-Brac series features all-axis adjustability and is designed to facilitate the mounting of any size OPS signal to any shape of mast arm or pole. The hinged clamping mechanism on the Galaxy provides for an easy convenient installation.

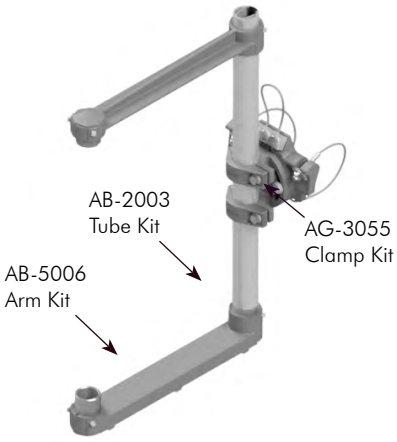

Galaxy 1-Way OPS Signal Assy, Cable Mount, 1-1/2" NPS

	Signal Section		Cable Length		Cable		Coating
AG-0151	- [ ]	-	[ ]	-	[ ]	-	[ ]
	3=50" Tube 4=66" Tube 5=82" Tube		See Table		Blank=Galv SS=Stainless		PNC=Process No Color P_ _=Paint

Cable Length:	62"	84"	96"	110"	120"	132"	144"	220"	280"
Maximum Pole Dia:	7.0"	10.5"	12.4"	14.6"	16.2"	18.2"	20.1"	32.2"	35.0"
Pole Dia w/ Ty-back:	4.5"	7.6"	9.6"	11.8"	13.4"	15.3"	17.2"	29.3"	35.0"

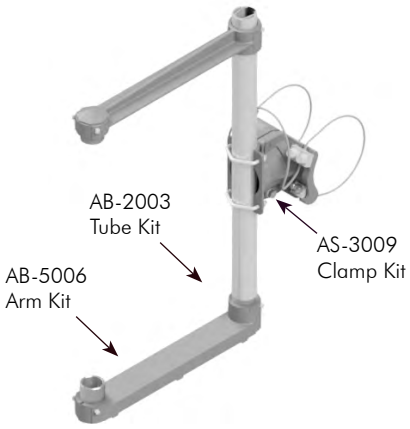

Stellar 1-Way OPS Signal Assy, Cable Mount, 1-1/2" NPS

	Signal Section		Cable Length		Cable		Coating
AS-0151	- [ ]	-	[ ]	-	[ ]	-	[ ]
	3=50" Tube 4=66" Tube 5=82" Tube		See Table		Blank=Galv SS=Stainless		PNC=Process No Color P_ _=Paint

Cable Length:	62"	84"	96"	110"	120"	132"	144"	220"	280"
Maximum Pole Dia:	7.0"	10.5"	12.4"	14.6"	16.2"	18.2"	20.1"	32.2"	35.0"
Pole Dia w/ Ty-back:	4.5"	7.6"	9.6"	11.8"	13.4"	15.3"	17.2"	29.3"	35.0"

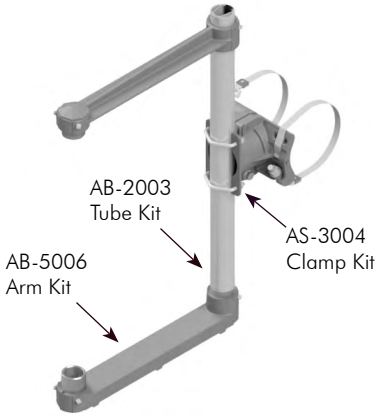

Stellar 1-Way OPS Signals Assy, Band Mount, 1-1/2" NPS

	Signal Section		Band Length		Coating
AS-0152	- [ ]	-	[ ]	-	[ ]
	3=50" Tube 4=66" Tube 5=82" Tube		See Table		PNC=Process No Color P_ _=Paint

Band Length:	29"	42"	56"	72"	114"
Maximum Pole Dia:	7.3"	11.5"	15.9"	21.0"	34.4"

Note: 1. All assemblies are supplied standard with stainless steel slotted washers and fasteners.
2. See Reference Section page vi for cable, band, and tube length information.
3. See Reference Section page v for available paint colors.

ISO 9001 www.intlcert.com

Astro-Brac
pelco PELCO PRODUCTS, INC.

1-Way OPS Assemblies

Designed to accommodate optically programmed signal heads. The Galaxy and Stellar Astro-Brac series features all-axis adjustability and is designed to facilitate the mounting of any size OPS signal to any shape of mast arm or pole. The hinged clamping mechanism on the Galaxy provides for an easy convenient installation.

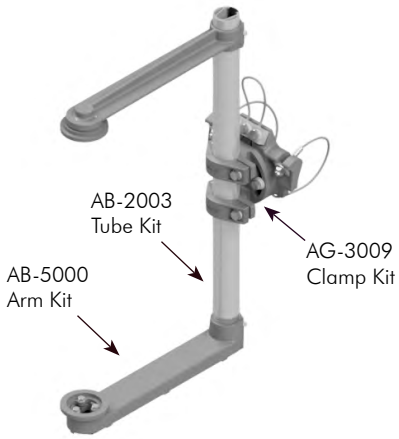

Galaxy 1-Way OPS Signal Assy, Cable Mount, Tri-Bolt

AG-0633 - [Signal Section] - [Cable Length] - [Cable] - [Coating]

Signal Section: 3=50″ Tube, 4=66″ Tube, 5=82″ Tube
Cable Length: See Table
Cable: Blank=Galv, SS=Stainless
Coating: PNC=Process No Color, P_ _=Paint

Cable Length:	62″	84″	96″	110″	120″	132″	144″	220″	280″
Maximum Pole Dia:	7.0″	10.5″	12.4″	14.6″	16.2″	18.2″	20.1″	32.2″	35.0″
Pole Dia w/ Ty-back:	4.5″	7.6″	9.6″	11.8″	13.4″	15.3″	17.2″	29.3″	35.0″

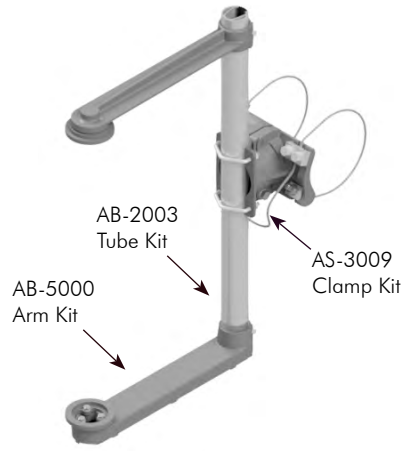

Stellar 1-Way OPS Signal Assy, Cable Mount, Tri-Bolt

AS-0633 - [Signal Section] - [Cable Length] - [Cable] - [Coating]

Signal Section: 3=50″ Tube, 4=66″ Tube, 5=82″ Tube
Cable Length: See Table
Cable: Blank=Galv, SS=Stainless
Coating: PNC=Process No Color, P_ _=Paint

Cable Length:	62″	84″	96″	110″	120″	132″	144″	220″	280″
Maximum Pole Dia:	7.0″	10.5″	12.4″	14.6″	16.2″	18.2″	20.1″	32.2″	35.0″
Pole Dia w/ Ty-back:	4.5″	7.6″	9.6″	11.8″	13.4″	15.3″	17.2″	29.3″	35.0″

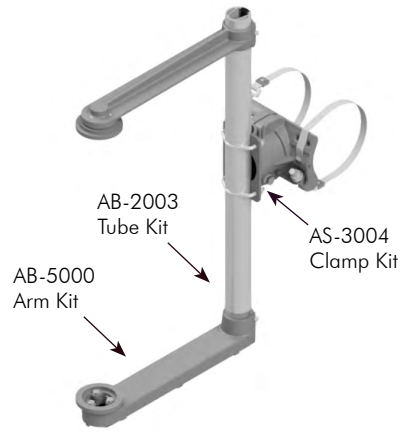

Stellar 1-Way OPS Signals Assy, Band Mount, Tri-Bolt

AS-0103 - [Signal Section] - [Band Length] - [Coating]

Signal Section: 3=50″ Tube, 4=66″ Tube, 5=82″ Tube
Band Length: See Table
Coating: PNC=Process No Color, P_ _=Paint

Band Length:	29″	42″	56″	72″	114″
Maximum Pole Dia:	7.3″	11.5″	15.9″	21.0″	34.4″

Note: 1. All assemblies are supplied standard with stainless steel slotted washers and fasteners.
2. See Reference Section page vi for cable, band, and tube length information.
3. See Reference Section page v for available paint colors.

1-Way OPS Assemblies

Designed to accommodate optically programmed signal heads. The Galaxy and Stellar Astro-Brac series features all-axis adjustability and is designed to facilitate the mounting of any size OPS signal to any shape of mast arm or pole. The hinged clamping mechanism on the Galaxy provides for an easy convenient installation.

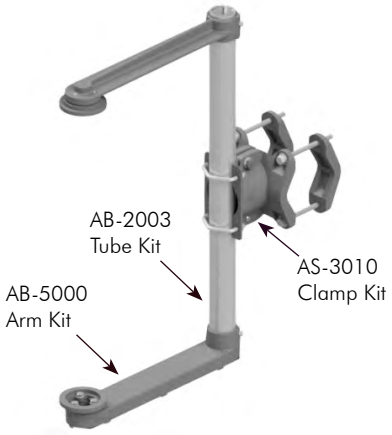

Stellar 1-Way OPS Signal Assy, Tenon Mount, Tri-Bolt

		Signal Section		Coating
AS-0143	-	☐	-	☐

3=3 Sec
4=4 Sec
5=5 Sec

PNC=Process No Color
P__=Paint

Note:
Fits 1.9" to 4.5" diameter.

Note: 1. All assemblies are supplied standard with stainless steel slotted washers and fasteners.
2. See Reference Section page vi for cable, band, and tube length information.
3. See Reference Section page v for available paint colors.

Variable OPS Assemblies

Designed to accommodate optically programmed signal heads. The Stellar 2-Way variable OPS assembly features all-axis adjustability and is designed to facilitate the mounting of unbalanced signal combinations to any shape mast arm or pole.

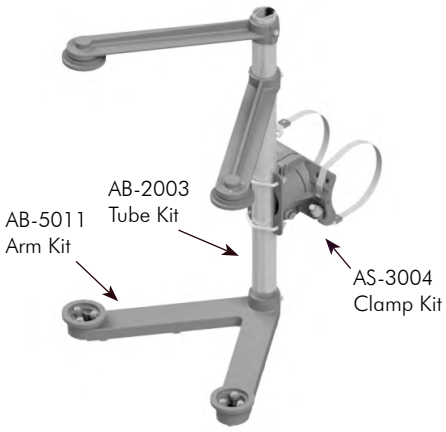

Stellar 2-Way Variable OPS Signal Assy, Band Mount, Tri-Bolt

	Signal Section		Band Length		Coating
AS-0192	- [ ]	-	[ ]	-	[ ]
	3=50″ Tube 4=66″ Tube 5=82″ Tube		See Table		PNC=Process No Color P_ _=Paint

Band Length:	29″	42″	56″	72″	114″
Maximum Pole Dia:	7.3″	11.5″	15.9″	21.0″	34.4″

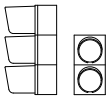

Note: 1. All assemblies are supplied standard with stainless steel slotted washers and fasteners.
2. See Reference Section page vi for cable, band, and tube length information.
3. See Reference Section page v for available paint colors.

Cluster OPS Assemblies

Designed to accommodate optically programmed signal heads. The Galaxy and Stellar Astro-Brac series features all-axis adjustability and is designed to facilitate the mounting of any size OPS signal to any shape of mast arm or pole. The hinged clamping mechanism on the Galaxy provides for an easy convenient installation.

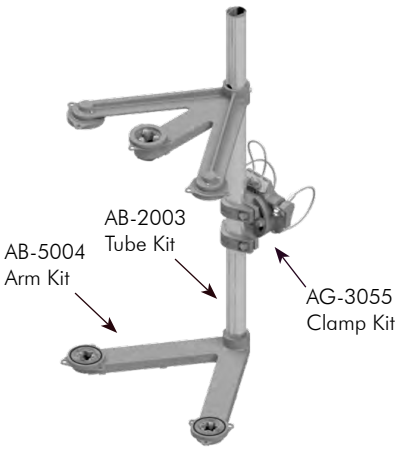

Galaxy 5-Sec Cluster OPS Signal Assy, Cable Mount, Tri-Bolt

AG-0199 - [Cable Length] - [Cable] - [Coating]

Cable Length: See Table
Cable: Blank=Galv, SS=Stainless
Coating: PNC=Process No Color, P_ _=Paint

Cable Length:	62″	84″	96″	110″	120″	132″	144″	220″	280″
Maximum Pole Dia:	7.0″	10.5″	12.4″	14.6″	16.2″	18.2″	20.1″	32.2″	35.0″
Pole Dia w/ Ty-back:	4.5″	7.6″	9.6″	11.8″	13.4″	15.3″	17.2″	29.3″	35.0″

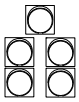

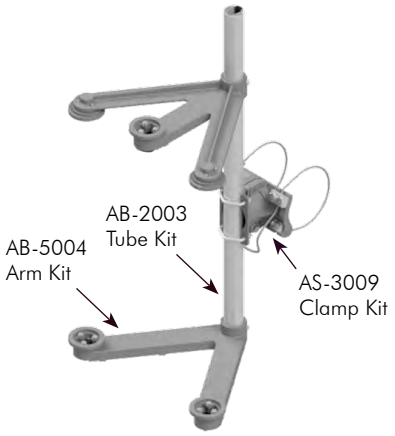

Stellar 5-Sec Cluster OPS Signal Assy, Cable Mount, Tri-Bolt

AS-0199 - [Cable Length] - [Cable] - [Coating]

Cable Length: See Table
Cable: Blank=Galv, SS=Stainless
Coating: PNC=Process No Color, P_ _=Paint

Cable Length:	62″	84″	96″	110″	120″	132″	144″	220″	280″
Maximum Pole Dia:	7.0″	10.5″	12.4″	14.6″	16.2″	18.2″	20.1″	32.2″	35.0″
Pole Dia w/ Ty-back:	4.5″	7.6″	9.6″	11.8″	13.4″	15.3″	17.2″	29.3″	35.0″

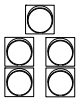

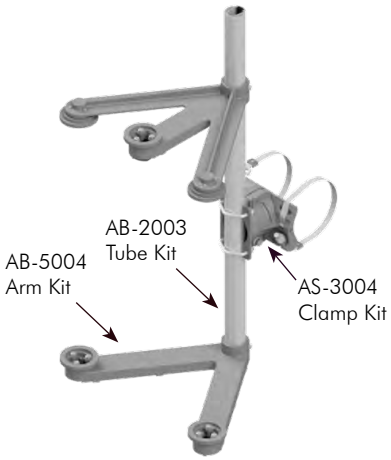

Stellar 5-Sec Cluster OPS Signal Assy, Band Mount, Tri-Bolt

AS-0191 - [Band Length] - [Coating]

Band Length: See Talbe
Coating: PNC=Process No Color, P_ _=Paint

Band Length:	29″	42″	56″	72″	114″
Maximum Pole Dia:	7.3″	11.5″	15.9″	21.0″	34.4″

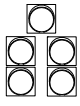

Note: 1. All assemblies are supplied standard with stainless steel slotted washers and fasteners.
2. See Reference Section page vi for cable, band, and tube length information.
3. See Reference Section page v for available paint colors.

Terminal Compartment Assemblies

Pelco's in-line Astro-Brac terminal compartment assemblies satisfy the need of a terminal compartment without sacrificing all-axis adjustability. Galaxy and Stellar series is designed to facilitate the mounting of any size signal to any shape of mast arm or pole. The hinged clamping mechanism on the Galaxy provides for an easy convenient installation.

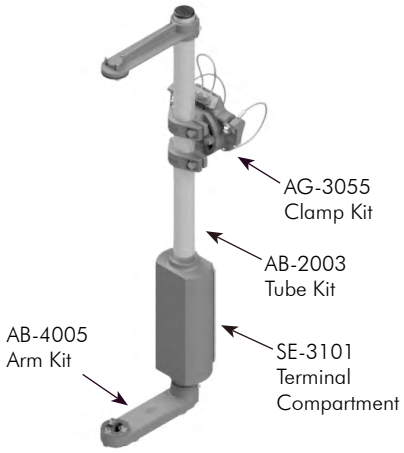

Galaxy 1-Way Terminal Compartment Assy, Cable Mount

AG-0620 - [Signal Section] - [Cable Length] - [Cable] - [Coating]

Signal Section	Cable Length	Cable	Coating
3=37″ Tube 4=46″ Tube 5=58″ Tube	See Table	Blank=Galv SS=Stainless	PNC=Process No Color P_ _=Paint

Cable Length:	62″	84″	96″	110″	120″	132″	144″	220″	280″
Maximum Pole Dia:	7.0″	10.5″	12.4″	14.6″	16.2″	18.2″	20.1″	32.2″	35.0″
Pole Dia w/ Ty-back:	4.5″	7.6″	9.6″	11.8″	13.4″	15.3″	17.2″	29.3″	35.0″

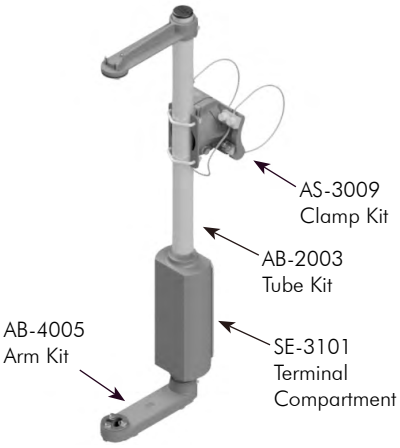

Stellar 1-Way Terminal Compartment Assy, Cable Mount

AS-0620 - [Signal Section] - [Cable Length] - [Cable] - [Coating]

Signal Section	Cable Length	Cable	Coating
3=37″ Tube 4=46″ Tube 5=58″ Tube	See Table	Blank=Galv SS=Stainless	PNC=Process No Color P_ _=Paint

Cable Length:	62″	84″	96″	110″	120″	132″	144″	220″	280″
Maximum Pole Dia:	7.0″	10.5″	12.4″	14.6″	16.2″	18.2″	20.1″	32.2″	35.0″
Pole Dia w/ Ty-back:	4.5″	7.6″	9.6″	11.8″	13.4″	15.3″	17.2″	29.3″	35.0″

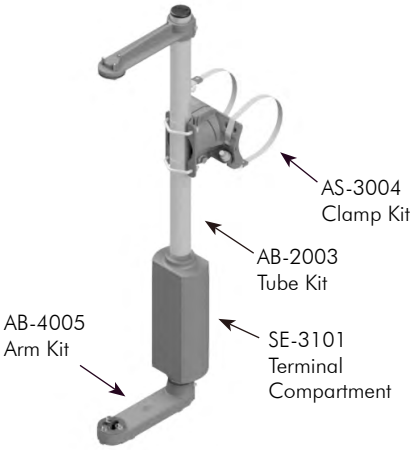

Stellar 1-Way Terminal Compartment Assy, Band Mount

AS-0112 - [Signal Section] - [Band Length] - [Coating]

Signal Section	Band Length	Coating
3=37″ Tube 4=46″ Tube 5=58″ Tube	See Table	PNC=Process No Color P_ _=Paint

Band Length:	29″	42″	56″	72″	114″
Maximum Pole Dia:	7.3″	11.5″	15.9″	21.0″	34.4″

Note: 1. All assemblies are supplied standard with stainless steel slotted washers and fasteners.
2. See Reference Section page vi for cable, band, and tube length information.
3. See Reference Section page v for available paint colors.

ISO 9001 www.intlcert.com

Terminal Compartment Assemblies

Pelco's in-line Astro-Brac terminal compartment assemblies satisfy the need of a terminal compartment without sacrificing all-axis adjustability. Galaxy and Stellar series is designed to facilitate the mounting of any size signal to any shape of mast arm or pole. The hinged clamping mechanism on the Galaxy provides for an easy convenient installation.

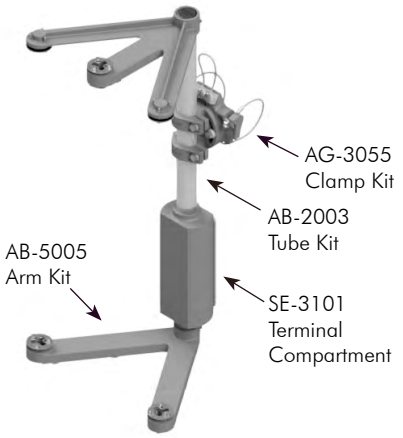

Galaxy 5-Sec Cluster Terminal Compartment Assy, Cable Mount

AG-0621 - [Cable Length: See Table] - [Cable: Blank=Galv, SS=Stainless] - [Coating: PNC=Process No Color, P_ _=Paint]

Cable Length:	62″	84″	96″	110″	120″	132″	144″	220″	280″
Maximum Pole Dia:	7.0″	10.5″	12.4″	14.6″	16.2″	18.2″	20.1″	32.2″	35.0″
Pole Dia w/ Ty-back:	4.5″	7.6″	9.6″	11.8″	13.4″	15.3″	17.2″	29.3″	35.0″

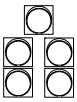

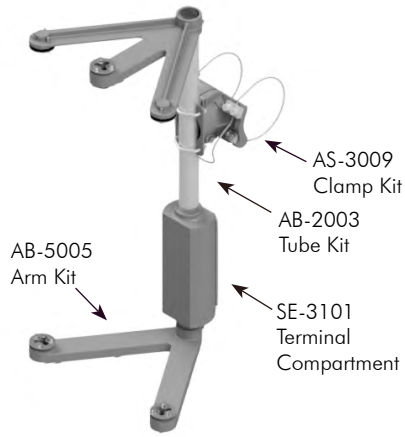

Stellar 5-Sec Cluster Terminal Compartment Assy, Cable Mount

AS-0621 - [Cable Length: See Table] - [Cable: Blank=Galv, SS=Stainless] - [Coating: PNC=Process No Color, P_ _=Paint]

Cable Length:	62″	84″	96″	110″	120″	132″	144″	220″	280″
Maximum Pole Dia:	7.0″	10.5″	12.4″	14.6″	16.2″	18.2″	20.1″	32.2″	35.0″
Pole Dia w/ Ty-back:	4.5″	7.6″	9.6″	11.8″	13.4″	15.3″	17.2″	29.3″	35.0″

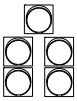

Note: 1. All assemblies are supplied standard with stainless steel slotted washer and fasteners.
2. See Reference Section for clamp kit pole diameters.
3. See Reference Section for available paint colors.

Galaxy Series Clamp Kits

The Galaxy is designed using a single cable plate which allows for easy installation, as well as the multi-directional adjustable tube saddle for strength. These high tensile aluminum alloy clamp kits provide strength with maximum adjustability and complete clamping versatility. The hinged clamping mechanism provides for an easy convenient installation. Comes complete with all necessary attaching hardware.

AB-0512
Cable Kit

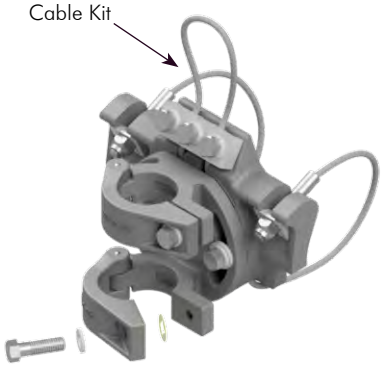

Galaxy Hinged Clamp Kit, Cable Mount

	Cable Length		Cable		Coating
AG-3055 -	[ ]	-	[ ]	-	[ ]
	See Table		Blank=Galv SS=Stainless		PNC=Process No Color P_ _=Paint

Cable Length:	62″	84″	96″	110″	120″	132″	144″	220″	280″
Maximum Pole Dia:	7.0″	10.5″	12.4″	14.6″	16.2″	18.2″	20.1″	32.2″	35.0″
Pole Dia w/ Ty-back:	4.5″	7.6″	9.6″	11.8″	13.4″	15.3″	17.2″	29.3″	35.0″

AB-0512
Cable Kit

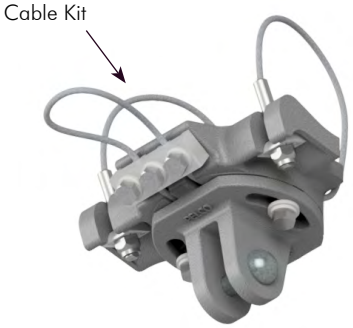

Galaxy Clamp Kit, Free-Swinging 3/4″ Clevis, Cable Mount

	Cable Length		Stainless Upgrade		Bushing		Coating
AG-3014 -	[ ]	-	[ ]	-	[ ]	-	[ ]
	See Table		Blank=Galv SS=Stainless		SB=Stainless Bushing		PNC=Process No Color P_ _=Paint

Cable Length:	62″	84″	96″	110″	120″	132″	144″	220″	280″
Maximum Pole Dia:	7.0″	10.5″	12.4″	14.6″	16.2″	18.2″	20.1″	32.2″	35.0″
Pole Dia w/ Ty-back:	4.5″	7.6″	9.6″	11.8″	13.4″	15.3″	17.2″	29.3″	35.0″

Note: Stainless upgrade to include stainless cable and pins.

Note: 1. All assemblies are supplied standard with stainless steel fasteners.
2. See Reference Section page vi for cable and band length information.
3. See Reference Section page v for available paint colors.

Stellar Series Clamp Kits

These high tensile aluminum alloy clamp kits provide strength with maximum adjustability and complete clamping versatility. The 2-piece clamp features a strong clamping method with quick and easy installation. Supplied with all necessary attaching hardware.

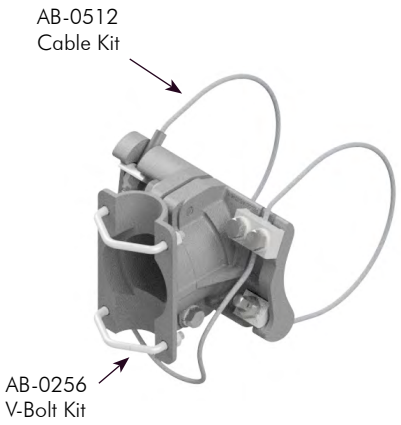

Stellar Clamp Kit, Cable Mount

AS-3009 - [Cable Length] - [Cable] - [Coating]

Cable Length: See Table
Cable: Blank=Galv, SS=Stainless
Coating: PNC=Process No Color, P_ _=Paint

Cable Length:	62″	84″	96″	110″	120″	132″	144″	220″	280″
Maximum Pole Dia:	7.0″	10.5″	12.4″	14.6″	16.2″	18.2″	20.1″	32.2″	35.0″
Pole Dia w/ Ty-back:	4.5″	7.6″	9.6″	11.8″	13.4″	15.3″	17.2″	29.3″	35.0″

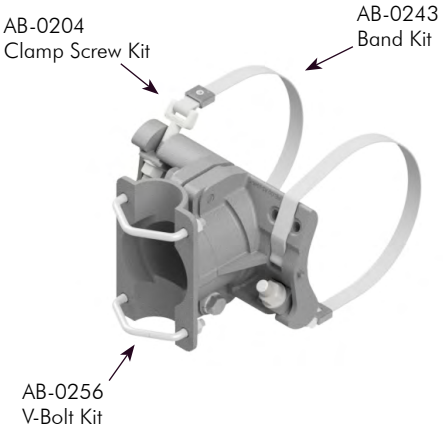

Stellar Clamp Kit, Band Mount

AS-3004 - [Cable Length] - [Coating]

Cable Length: See Table
Coating: PNC=Process No Color, P_ _=Paint

Band Length:	29″	42″	56″	72″	114″
Maximum Pole Dia:	7.3″	11.5″	15.9″	21.0″	34.4″

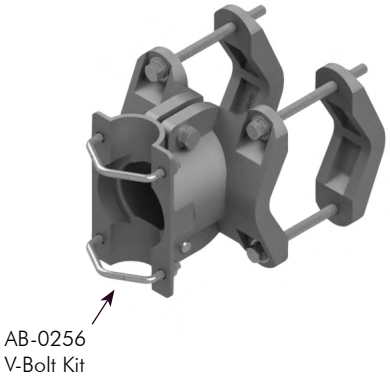

Stellar Clamp Kit, Tenon Mount

AS-3010 - [Coating]

Coating: PNC=Process No Color, P_ _=Paint

Note: Fits 1.9″ to 4.5″ diameter.
Application Note: Used on trombone style arm.

Note: 1. All assemblies are supplied standard with stainless steel fasteners.
2. See Reference Section page vi for cable and band length information.
3. See Reference Section page v for available paint colors.

Atlas Series Clamp Kits

These aluminum serrated articulating clamp kits were specifically designed to accommodate larger conduit. The 3 axis adjustability provides complete clamping versatility. They feature stainless steel bands or high strength galvanized or stainless steel aircraft cable. Supplied complete with all necessary attaching hardware.

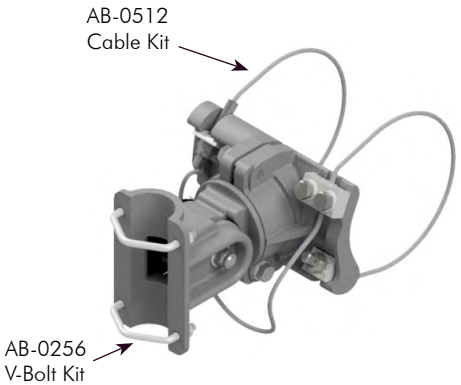

Atlas Articulated Serrated Clamp Kit, Cable Mount

AS-3026 - [Cable Length] - [Cable] - [Coating]

Cable Length: See Table
Cable: Blank=Galv, SS=Stainless
Coating: PNC=Process No Color, P_ _=Paint

Cable Length:	62″	84″	96″	110″	120″	132″	144″	220″	280″
Maximum Pole Dia:	7.0″	10.5″	12.4″	14.6″	16.2″	18.2″	20.1″	32.2″	35.0″
Pole Dia w/ Ty-back:	4.5″	7.6″	9.6″	11.8″	13.4″	15.3″	17.2″	29.3″	35.0″

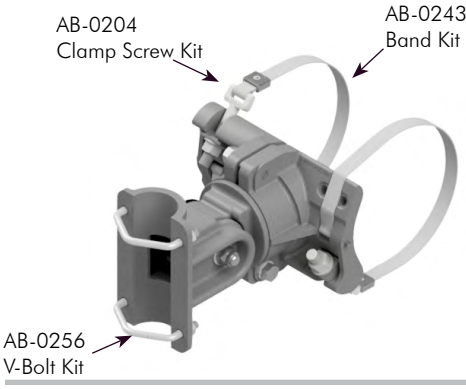

Atlas Articulated Serrated Clamp Kit, Band Mount

AS-3029 - [Cable Length] - [Coating]

Cable Length: See Table
Coating: PNC=Process No Color, P_ _=Paint

Band Length:	29″	42″	56″	72″	114″
Maximum Pole Dia:	7.3″	11.5″	15.9″	21.0″	34.4″

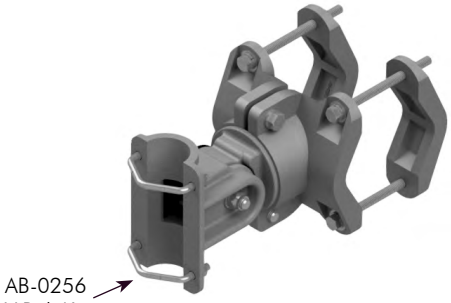

Atlas Articulated Serrated Clamp Kit, Tenon Mount, Clamp

AS-3030 - [Coating]

Coating: PNC=Process No Color, P_ _=Paint

Note:
Fits 1.9″ to 4.5″ diameter.

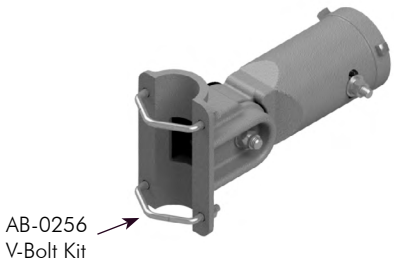

Atlas Articulated Serrated Clamp Kit, Tenon Mount, Slip

AB-3051 - [Coating]

Coating: PNC=Process No Color, P_ _=Paint

Note:
Fits 2-3/8″ diameter.

Note: 1. All assemblies are supplied standard with stainless steel fasteners.
2. See Reference Section page vi for cable and band length information.
3. See Reference Section page v for available paint colors.

Triton Series Clamp Kits

These high tensile aluminum alloy clamp kits provide strength with maximum adjustability and complete clamping versatility. The Triton clamp kits utilize three bands or cables and are designed to be used with a 2-3/8″ diameter tube. Comes complete with all necessary attaching hardware.

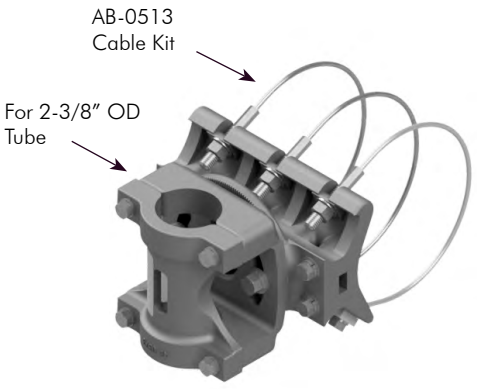

Triton Clamp Kit for 2″ Tube, Cable Mount

	Cable Length		Cable		Coating
AB-3040	- [ ]	-	[ ]	-	[ ]
	See Table		Blank=Galv SS=Stainless		PNC=Process No Color P_ _=Paint

Cable Length:	45″	62″	84″
Maximum Pole Dia:	11.1″	16.6″	22.0″

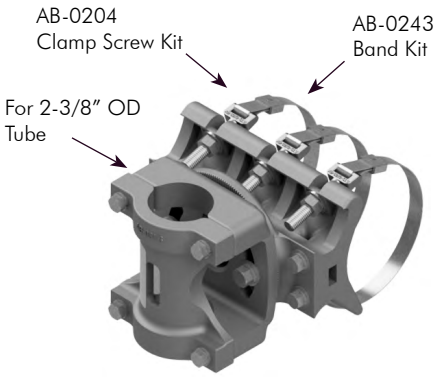

Triton Clamp Kit for 2″ Tube, Band Mount

	Cable Length		Coating
AB-3039	- [ ]	-	[ ]
	See Table		PNC=Process No Color P_ _=Paint

Band Length:	29″	42″	56″	72″
Maximum Pole Dia:	7.3″	11.5″	15.9″	21.0″

Note: 1. All assemblies are supplied standard with stainless steel fasteners.
2. See Reference Section page vi for cable and band length information.
3. See Reference Section page v for available paint colors.

Cable Mount Clamp Kits

These high tensile aluminum alloy clamp kits provide strength with maximum adjustability and complete clamping versatility.
They feature high strength galvanized or stainless steel aircraft cable.
Supplied complete with all necessary attaching hardware.

Astro-Brac Clamp Kit, 1-1/2" NPS Cable Mount

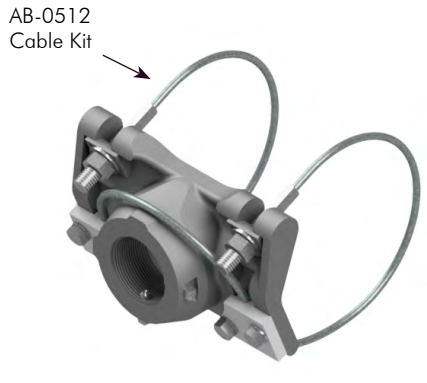

	Cable Length		Cable		Coating
AB-3034	- [ ]	-	[ ]	-	[ ]
	See Table		Blank=Galv SS=Stainless		PNC=Process No Color P_ _=Paint

Cable Length:	62"	84"	96"	110"	120"	132"	144"	220"	280"
Maximum Pole Dia:	7.0"	10.5"	12.4"	14.6"	16.2"	18.2"	20.1"	32.2"	35.0"
Pole Dia w/ Ty-back:	4.5"	7.6"	9.6"	11.8"	13.4"	15.3"	17.2"	29.3"	35.0"

Astro-Brac Clamp Kit, 2" NPS Cable Mount

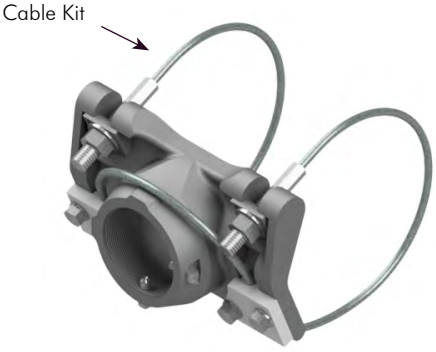

	Cable Length		Cable		Coating
AB-3035	- [ ]	-	[ ]	-	[ ]
	See Table		Blank=Galv SS=Stainless		PNC=Process No Color P_ _=Paint

Cable Length:	62"	84"	96"	110"	120"	132"	144"	220"	280"
Maximum Pole Dia:	7.0"	10.5"	12.4"	14.6"	16.2"	18.2"	20.1"	32.2"	35.0"
Pole Dia w/ Ty-back:	4.5"	7.6"	9.6"	11.8"	13.4"	15.3"	17.2"	29.3"	35.0"

Astro-Brac Clamp Kit, 2" NPS x 6" Plumbizer Tube Cable Mount

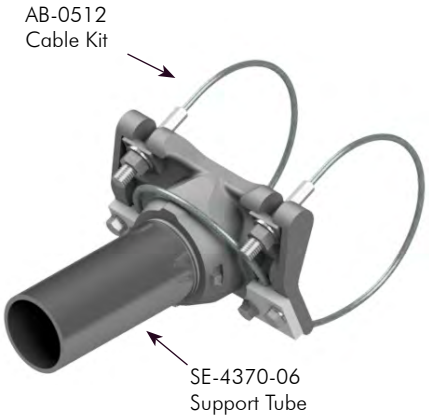

	Cable Length		Cable		Coating
AB-3053	- [ ]	-	[ ]	-	[ ]
	See Table		Blank=Galv SS=Stainless		PNC=Process No Color P_ _=Paint

Cable Length:	62"	84"	96"	110"	120"	132"	144"	220"	280"
Maximum Pole Dia:	7.0"	10.5"	12.4"	14.6"	16.2"	18.2"	20.1"	32.2"	35.0"
Pole Dia w/ Ty-back:	4.5"	7.6"	9.6"	11.8"	13.4"	15.3"	17.2"	29.3"	35.0"

Note: 1. All assemblies are supplied standard with stainless steel fasteners.
2. See Reference Section page vi for cable and band length information.
3. See Reference Section page v for available paint colors.

Band Mount Clamp Kits

These high tensile aluminum alloy clamp kits provide strength with maximum adjustability and complete clamping versatility. They feature forged galvanized clamp screws which allow easy signal mounting on any size signal pole. Supplied complete with all necessary attaching hardware.

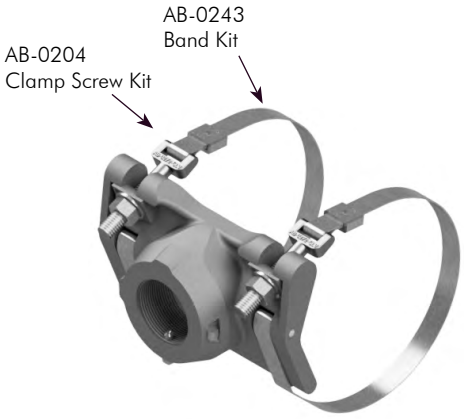

Astro-Brac Clamp Kit, 1-1/2" NPS Band Mount

AB-3006 - [Band Length] - [Coating]

Band Length: See Table

Coating: PNC=Process No Color, P_ _=Paint

Band Length:	29"	42"	56"	72"	114"
Maximum Pole Dia:	7.3"	11.5"	15.9"	21.0"	34.4"

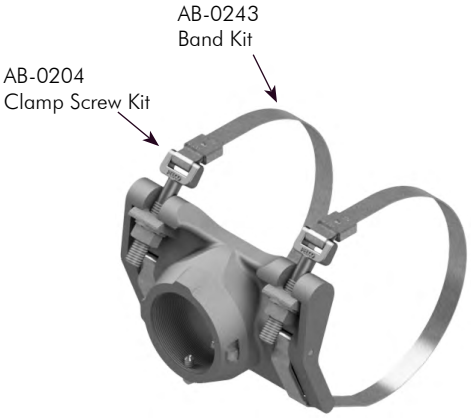

Astro-Brac Clamp Kit, 2" NPS Band Mount

AB-3007 - [Band Length] - [Coating]

Band Length: See Table

Coating: PNC=Process No Color, P_ _=Paint

Band Length:	29"	42"	56"	72"	114"
Maximum Pole Dia:	7.3"	11.5"	15.9"	21.0"	34.4"

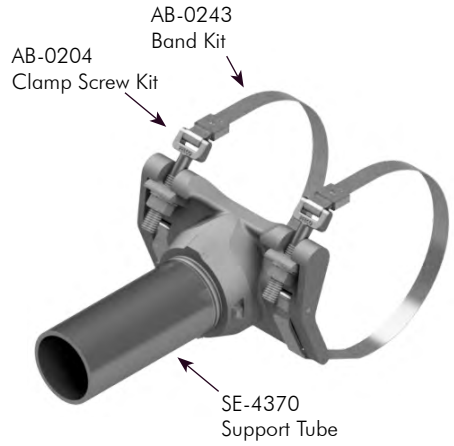

Astro-Brac Clamp Kit, w/ 2" NPS Plumbizer Tube Band Mount

AB-3008 - [Band Length] - [Coating]

Band Length: See Table

Coating: PNC=Process No Color, P_ _=Paint

Band Length:	29"	42"	56"	72"	114"
Maximum Pole Dia:	7.3"	11.5"	15.9"	21.0"	34.4"

Note: 1. All assemblies are supplied standard with stainless steel fasteners.
2. See Reference Section page vi for cable and band length information.
3. See Reference Section page v for available paint colors.

Mini-Brac Clamp Kits

This unique mount is a smaller version of the Astro-Brac and gives the same kind of universal application. The Astro Mini-Brac is ideal for side-of-pole or mast arm mountings for vehicle or pedestrian signals and emergency traffic signal sensors. Available in cable or band mount.

AB-0513
Cable Kit

Mini-Brac Clamp Kit, 1-1/2" NPS Cable Mount

AB-0160 - [Cable Length] - [Cable] - [Coating]

Cable Length: See Table
Cable: Blank=Galv, SS=Stainless
Coating: PNC=Process No Color, P_ _=Paint

Cable Length:	45"	62"	84"
Maximum Pole Dia:	11.1"	16.6"	22.0"

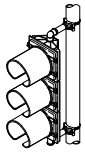

Side-of-Pole Mounting
Vehicular or Pedestrian Signals

AB-0303
Clamp Screw Kit

Mini-Brac Clamp Kit, 1-1/2" NPS Band Mount,

AB-0121 - [Band Length] - [Coating]

Band Length: See Table
Coating: PNC=Process No Color, P_ _=Paint

Band Length:	29"	42"	56"	72"
Maximum Pole Dia:	7.3"	11.5"	15.9"	21.0"

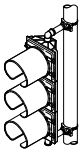

Side-of-Pole Mounting
Vehicular or Pedestrian Signals

AB-0513
Cable Kit

Mini-Brac Clamp Kit, 3/4"-14 NPT Cable Mount

AB-0163 - [Cable Length] - [Cable] - [Coating]

Cable Length: See Table
Cable: Blank=Galv, SS=Stainless
Coating: PNC=Process No Color, P_ _=Paint

Cable Length:	45"	62"	84"
Maximum Pole Dia:	11.1"	16.6"	22.0"

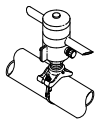

Mast Arm Mounting
Emergency Traffic Signal Sensor

AB-0303
Clamp Screw Kit

Mini-Brac Clamp Kit, 3/4"-14 NPT Band Mount

AB-0155 - [Band Length] - [Coating]

Band Length: See Table
Coating: PNC=Process No Color, P_ _=Paint

Band Length:	29"	42"	56"	72"
Maximum Pole Dia:	7.3"	11.5"	15.9"	21.0"

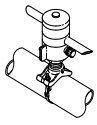

Mast Arm Mounting
Emergency Traffic Signal Sensor

Note: 1. All assemblies are supplied standard with stainless steel fasteners.
2. See Reference Section page vi for cable and band length information.
3. See Reference Section page v for available paint colors.

ISO 9001 www.intlcert.com

This page is intentionally left blank.

1-Way Astro-Brac Arm Kits

All Pelco arm kits are durable aluminum alloy castings. Various styles are available to fit any manufacturers signal. They allow positive positioning of the signal head without misalignment. Supplied complete with stainless steel hardware and wire covers.

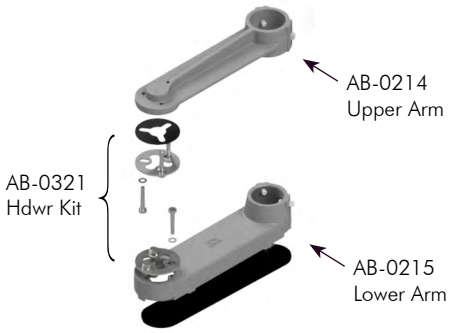

1-Way Kit, 8-1/2" CTC, Alum

AB-4005 - ☐ Coating

PNC=Process No Color
P_ _=Paint

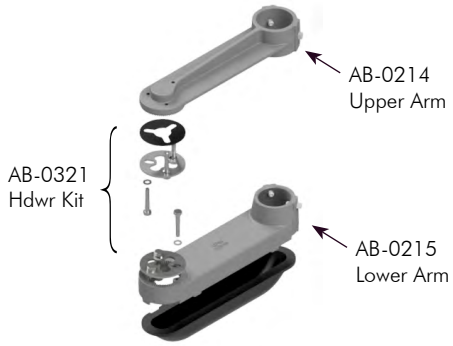

1-Way Arm Kit, 8-1/2" CTC, Alum Large Capacity,

AS-4005 - ☐ Coating

PNC=Process No Color
P_ _=Paint

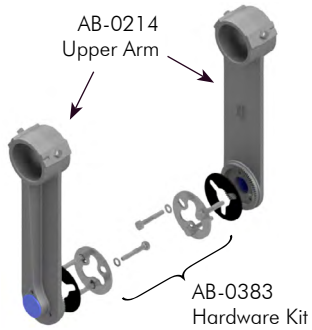

1-Way Arm Kit, 8-1/2" CTC, Alum Tapped for 3/4" CGB

AB-4013 - ☐ Coating

PNC=Process No Color
P_ _=Paint

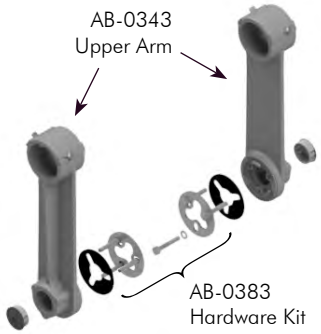

1-Way Arm Kit, 8-1/2" CTC, Alum Tapped for 1" CGB

AB-4010 - ☐ Coating

PNC=Process No Color
P_ _=Paint

Note: 1. All assemblies are supplied standard with stainless steel washer and fasteners.
2. See Reference Section page v for available paint colors.

1-Way Astro-Brac Arm Kits

All Pelco arm kits are durable aluminum alloy castings. Various styles are available to fit any manufacturers signal. They allow positive positioning of the signal head without misalignment. Supplied complete with stainless steel hardware and wire covers.

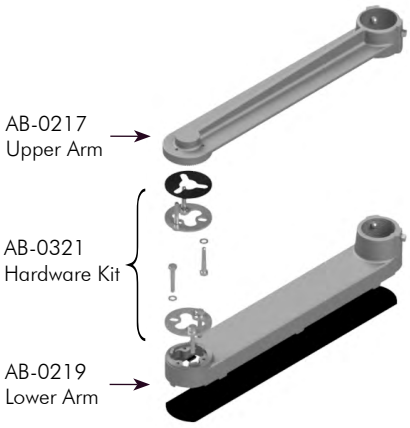

1-Way Arm Kit, 14" CTC, Alum for ICC Ped Head

AB-4012 - [ ] Coating

PNC=Process No Color
P_ _=Paint

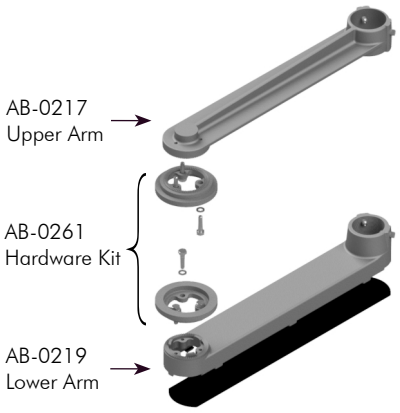

1-Way Arm Kit, 14" CTC, Alum for 3M OPS Signals, Tri-Stud

AB-5000 - [ ] Coating

PNC=Process No Color
P_ _=Paint

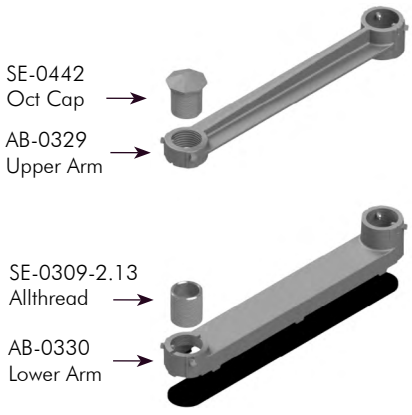

1-Way Arm Kit, 16" CTC, for OPS Signals, 1-1/2" NPS

AB-5006 - [ ] Coating

PNC=Process No Color
P_ _=Paint

Note: 1. All assemblies are supplied standard with stainless steel slotted washer and fasteners.
2. See Reference Section page v for available paint colors.

2-Way Astro-Brac Arm Kits

All Pelco arm kits are durable aluminum alloy castings. Various styles are available to fit any manufacturers signal. They allow positive positioning of the signal head without misalignment. Supplied complete with stainless steel hardware and wire covers.

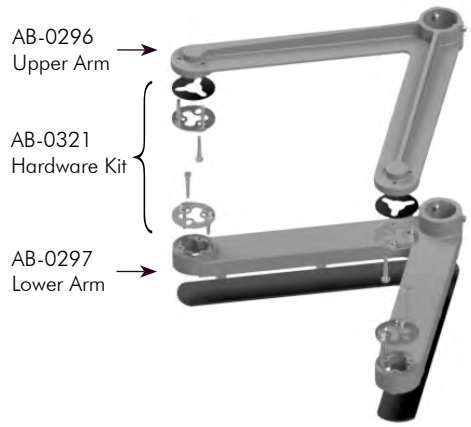

2-Way Arm Kit, 16" CTC, Alum

AB-5008 - [ ] Coating

PNC=Process No Color
P_ _=Paint

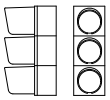

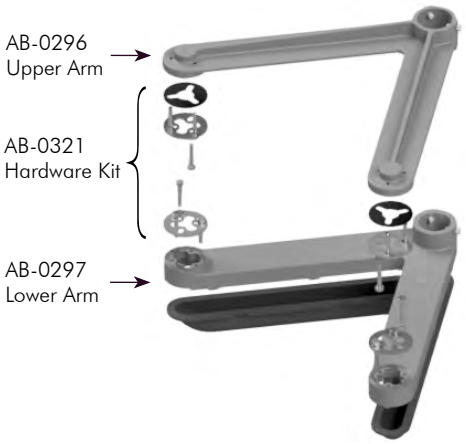

2-Way Arm Kit, 16" CTC, Alum Large Capacity

AS-5008 - [ ] Coating

PNC=Process No Color
P_ _=Paint

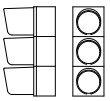

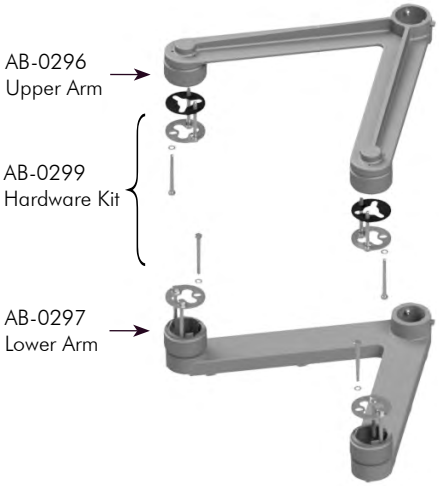

2-Way Arm Kit, 16" CTC, Alum for ICC Ped Head

AB-4009 - [ ] Coating

PNC=Process No Color
P_ _=Paint

Note: 1. All assemblies are supplied standard with stainless steel slotted washer and fasteners.
2. See Reference Section page v for available paint colors.

2-Way Variable Astro-Brac Arm Kits

All Pelco arm kits are durable aluminum alloy castings. Various styles are available to fit any manufacturers signal. They allow positive positioning of the signal head without misalignment. Supplied complete with stainless steel hardware and wire covers.

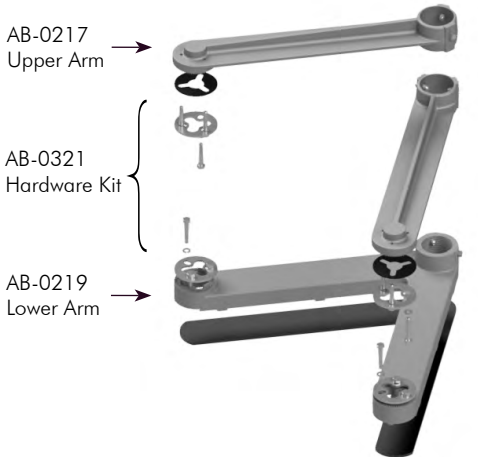

2-Way Variable Arm Kit, 16" CTC, Alum

AB-5007 - [ ] Coating

PNC=Process No Color
P_ _=Paint

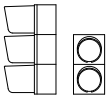

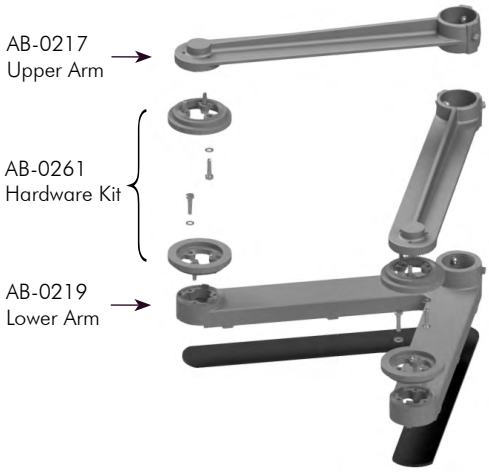

2-Way Variable Arm Kit, 16" CTC, Alum for OPS Signals

AB-5011 - [ ] Coating

PNC=Process No Color
P_ _=Paint

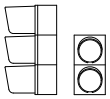

Note: 1. All assemblies are supplied standard with stainless steel slotted washer and fasteners.
2. See Reference Section page v for available paint colors.

Cluster Astro-Brac Arm Kits

All Pelco arm kits are durable aluminum alloy castings. Various styles are available to fit any manufacturers signal. They allow positive positioning of the signal head without misalignment. Supplied complete with stainless steel hardware and wire covers.

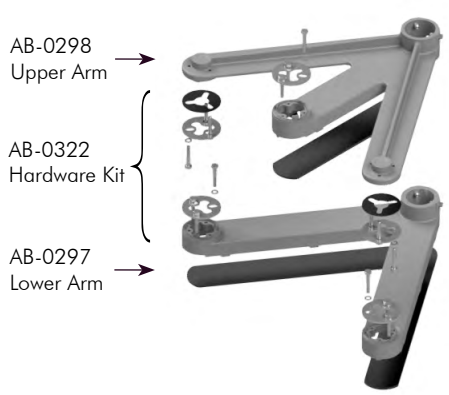

5-Section Cluster Arm Kit, 16" CTC, Alum

AB-5005 - [ ] Coating

PNC=Process No Color
P_ _=Paint

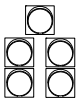

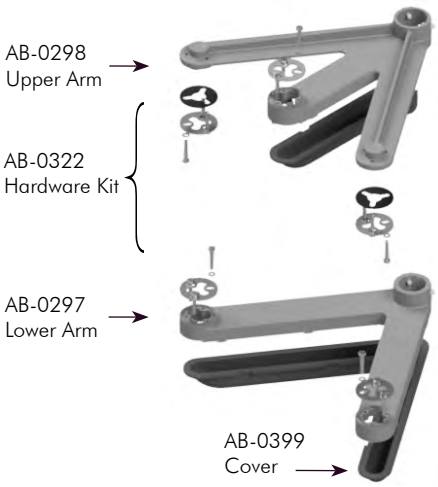

5-Section Cluster Arm Kit, 16" CTC, Alum Large Capacity

AS-5005 - [ ] Coating

PNC=Process No Color
P_ _=Paint

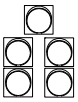

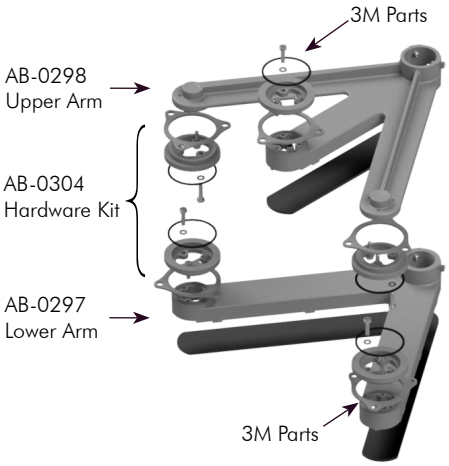

5-Section Cluster Arm Kit, 16" CTC, Alum for 3M OPS Signals

AB-5004 - [ ] Coating

PNC=Process No Color
P_ _=Paint

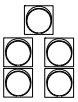

Note: 1. All assemblies are supplied standard with stainless steel slotted washer and fasteners.
2. See Reference Section page v for available paint colors.

Aluminum Gusseted Tubes

Supplied in lengths shown below, Pelco's vertical support tubing is made from high strength aluminum alloy. A unique shape and PVC insert insures a complete weather proof wiring installation anywhere along the entire length of the tube. The standard 46" tube will accommodate standard signal combinations up to 3-section 12", with the 58" and 74" lengths for 4 and 5-section combinations. Optional tube lengths are available for mounting OPS signals.

AB-0306
Gusseted Tube

AB-0392
PVC Insert

Gusseted Tube w/ 3/4" Opening & PVC Insert, 1-1/2" (1.90" OD) x Length, Threaded One End

AB-2003 - [Length] - [Coating]

Length:
23=23"
37=37"
46=46"
58=58"
74=74"

Coating:
PNC=Process No Color
P_ _=Paint

AB-0307
Gusseted Tube

AB-0392
PVC Insert

Gusseted Tube w/ 3/4" Opening & PVC Insert, 1-1/2" (1.90" OD) x Length, Threaded Both Ends

AB-2007 - [Length] - [Coating]

Length:
23=23"
37=37"
46=46"
58=58"
74=74"

Coating:
PNC=Process No Color
P_ _=Paint

Concealed Wiring Installation

Pelco's aluminum gusseted tubes allow wire entry at any point. The PVC insert conceals wiring from mast arm to signal head. Simply run wire through field-drilled hole in mast arm, through Astro-Brac, and into support tube. The hollow lower arm provides a channel for wire to be fed into signal head.

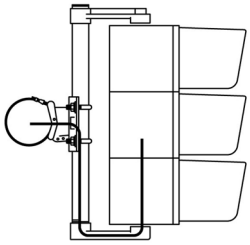

Note: 1. Standard lengths shown above. Lengths up to 120" maximum are available upon request.
2. See Reference Section page vi for appropriate tube length for mouting both standard and OPS signals.
3. See Reference Section page v for available paint colors.

Aluminum Gusseted Tubes

Supplied in lengths shown below, Pelco's vertical support tubing is made from high strength aluminum alloy. A unique shape and PVC insert insures a complete weather proof wiring installation anywhere along the entire length of the tube. The standard 46" tube will accommodate standard signal combinations up to 3-section 12", with the 58" and 74" lengths for 4 and 5-section combinations. Optional tube lengths are available for mounting OPS signals.

Gusseted Tube w/ 3/4" Opening, 1-1/2" (1.90" OD) x Length, No Threads

AB-0390 - [Length] - [Coating]

Length: 23=23" 37=37" 46=46" 58=58" 74=74"

Coating: PNC=Process No Color P_ _=Paint

Gusseted Tube w/ 3/4" Opening, 1-1/2" (1.90" OD) x Length, Threaded One End

AB-0306 - [Length] - [Coating]

Length: 23=23" 37=37" 46=46" 58=58" 74=74"

Coating: PNC=Process No Color P_ _=Paint

Gusseted Tube w/ 3/4" Opening, 1-1/2" (1.90" OD) x Length, Threaded Both Ends

AB-0307 - [Length] - [Coating]

Length: 23=23" 37=37" 46=46" 58=58" 74=74"

Coating: PNC=Process No Color P_ _=Paint

Note: 1. Standard lengths shown above. Lengths up to 120" maximum are available upon request.
2. See Reference Section page vi for appropriate tube length for mouting both standard and OPS signals.
3. See Reference Section page v for available paint colors.

Aluminum Tubes

Supplied in lengths shown below, Pelco's vertical support tubing is made from high strength aluminum alloy. The standard 46" tube will accommodate standard signal combinations up to 3-section 12", with the 58" and 74" lengths for 4 and 5-section combinations. Optional tube lengths are available for mounting OPS signals.

Tube, 1-1/2" SCH 40 Aluminum, 1.90" OD x Length, No Threads

	Length		Coating
SE-0484 -	[ ]	-	[ ]

Length:
23=23"
37=37"
46=46"
58=58"
74=74"

Coating:
PNC=Process No Color
P_ _=Paint

Tube, 2" SCH 40 Aluminum, 2.375" OD x Length, No Threads

	Length		Coating
SE-0494 -	[ ]	-	[ ]

Length:
23=23"
37=37"
46=46"
58=58"
74=74"

Coating:
PNC=Process No Color
P_ _=Paint

Note: 1. Standard lengths shown above. Lengths up to 120" maximum are available upon request.
2. See Reference Section page vi for appropriate tube length for mouting both standard and OPS signals.
3. See Reference Section page v for available paint colors.

Astro-Brac Hardware Kits

AB-0321-SS **Hardware Kit, 1-Way Arm, 1/4”-20NC**

AB-0383-SS **Hardware Kit, CGB Arm, 1/4”-20NC**

AB-0261-SS **Hardware Kit, OPS 1-Way, 1/4”-20NC, 3M Adapter Ring**

AB-0322-SS **Hardware Kit, 5-Section Cluster, 1/4”-20NC**

AB-0304-SS **Hardware Kit, OPS 5-Section Cluster, 1/4”-20NC, 3M Adapter Ring**

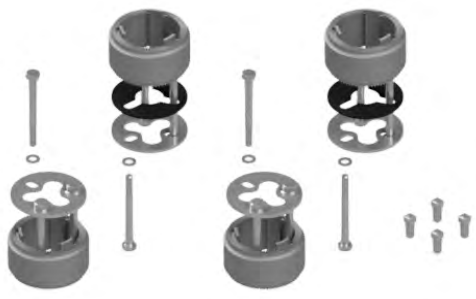

AB-0299-SS **Hardware Kit, 2-Way ICC Ped Signal, 1/4”-20NC, Ped Head Adapter**

Note: 1. All hardware kits are supplied standard with stainless slotted washers and fasteners.

Astro-Brac Hardware Kits

AB-0204-SS **Clamp Screw Kit, 7/16”-14, Stainless**

AB-0303-SS **Clamp Screw Kit, 7/16”-14, Stainless**

AB-0256-SS **V-Bolt Kit, 5/16”-18, Stainless**

AB-1000-PNC **Helping Hand Assembly**
For use with
Galaxy & Stellar Clamp Kits

Note: 1. All hardware kits are supplied standard with stainless fasteners.

Astro-Brac Hardware Kits

Cable Assy, Astro-Brac, Stainless Hardware

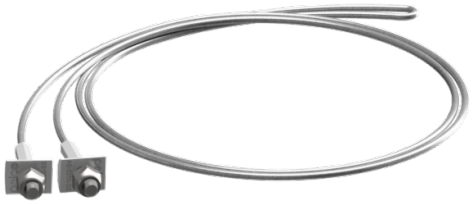

AB-0512 - [Length] - [Cable]

Length: See Table

Cable: GLV=Galvanized, SS=Stainless Steel

Cable Length:	62″	84″	96″	110″	120″	132″	144″	220″	280″
Maximum Pole Dia:	7.0″	10.5″	12.4″	14.6″	16.2″	18.2″	20.1″	32.2″	35.0″

Cable Assy, Mini-Brac, Stainless Hardware

AB-0513 - [Length] - [Cable]

Length: See Table

Cable: GLV=Galvanized, SS=Stainless Steel

Cable Length:	45″	62″	84″
Maximum Pole Dia:	11.1″	16.6″	22.0″

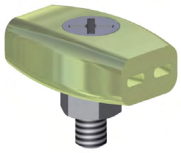

AB-0506-ZN2 **Ty-Back Restraining Clamp**
For use with Cable
Stellar & Atlas Clamp Kits

Note: 1. All hardware kits are supplied standard with stainless fasteners.

Astro-Brac Hardware Kits

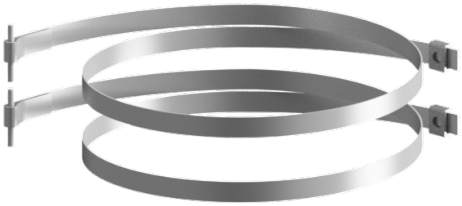

Band Assy, Astro-Brac Set of 2, Stainless w/ Clamps, Set Screws, & Groove Pins

AB-0509 - [Length: See Table] - SS

Band Length:	29″	42″	56″	72″	114″
Maximum Pole Dia:	7.3″	11.5″	15.9″	21.0″	34.4″

Band Assy, Mini-Brac Set of 1, Stainless w/ Clamp, Set Screw, & Groove Pin

AB-0510 - [Length: See Table] - SS

Band Length:	29″	42″	56″	72″
Maximum Pole Dia:	7.3″	11.5″	15.9″	21.0″

Band w/ Clamp & Set Screw, Stainless

AB-0243 - [Length: See Table] - [Coating: SS=Stainless Steel, P_ _=Paint]

Band Length:	29″	42″	56″	72″	114″
Maximum Pole Dia:	7.3″	11.5″	15.9″	21.0″	34.4″

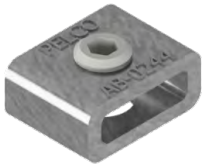

AB-0514-SS **Band Clamp w/ Set Screw, Stainless**

Note: 1. All hardware kits are supplied standard with stainless fasteners.

Aluminum 1-Way Hanger Assemblies

Pelco's Span Wire mountings are available in aluminum or iron with 1-1/2" NPS or tri-stud fittings. Balance adjusters provide additional adjustment capabilities, while tether assemblies may be used to anchor the bottom of signals in windy applications.

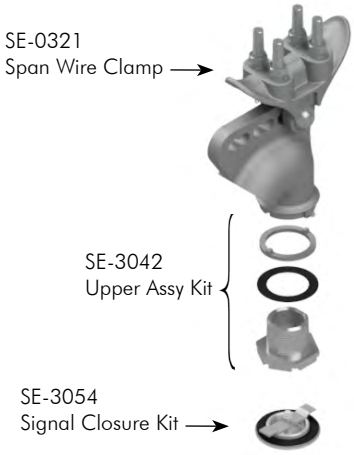

Span Wire Hanger Assy, Alum Cast Nipple

	Bushing		Stainless Upgrade		Coating
SE-3043 -	☐	-	☐	-	☐
	Blank=None SB=Stainless Bushing		Blank=Galv SS=Stainless		PNC=Process No Color P_ _=Paint

Note:
Stainless upgrade includes stainless steel fasteners and pins on span wire clamp.

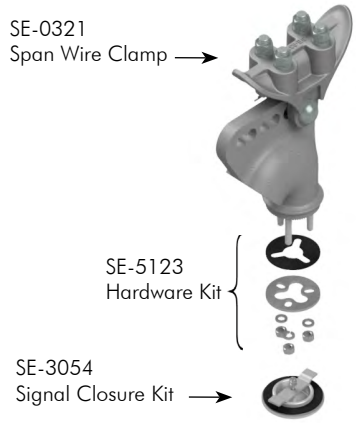

Span Wire Hanger Assy, Alum Tri-Stud

	Bushing		Stainless Upgrade		Coating
SE-5089 -	☐	-	☐	-	☐
	Blank=None SB=Stainless Bushing		Blank=Galv SS=Stainless		PNC=Process No Color P_ _=Paint

Note:
Stainless upgrade includes stainless steel fasteners and pins on span wire clamp.

Span Wire Hanger Assy, Alum w/ Iron Balance Adjuster Cast Nipple

	Bushing		Stainless Upgrade		Coating
SE-3033 -	☐	-	☐	-	☐
	Blank=None Sb=Stainless Bushing		Blank=Galv SS=Stainless		PNC=Process No Color P_ _=Paint

Note:
Stainless upgrade includes stainless steel fasteners and pins on span wire clamp.

Note: 1. All assemblies are supplied standard with stainless slotted washer and fasteners, with galvanized hardware on span wire clamps. Stainless upgrade available.
2. See Reference Section page v for available paint colors.

Aluminum 1-Way Hanger Assemblies

Pelco's Span Wire mountings are available in aluminum or iron with 1-1/2" NPS or tri-stud fittings. Balance adjusters provide additional adjustment capabilities, while tether assemblies may be used to anchor the bottom of signals in windy applications.

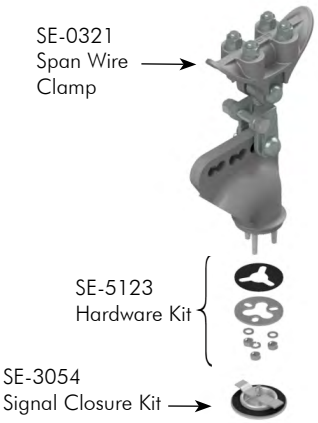

Span Wire Hanger Assy w/ Iron Balance Adjuster Tri-Stud, Alum

	Bushing		Stainless Upgrade		Coating
SE-5162 -	[ ]	-	[ ]	-	[ ]
	Blank=None SB=Stainless Bushing		Blank=Galv SS=Stainless		PNC=Process No Color P_ _=Paint

Note:
Stainless upgrade includes stainless steel fasteners and pins on span wire clamp.

Span Wire Hanger Assy w/ PAL Balance Adjuster Cast Nipple, Alum

	Bushing		Stainless Upgrade		Coating
SE-3276 -	[ ]	-	[ ]	-	[ ]
	Blank=None SB=Stainless Bushing		Blank=Galv SS=Stainless		PNC=Process No Color P_ _=Paint

Note:
Stainless upgrade includes stainless steel fasteners and pins on span wire clamp.

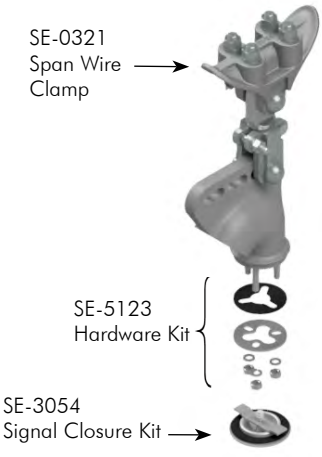

Span Wire Hanger Assy w/ PAL Balance Adjuster Tri-Stud, Alum

	Bushing		Stainless Upgrade		Coating
SE-5164 -	[ ]	-	[ ]	-	[ ]
	Blank=None SB=Stainless Bushing		Blank=Galv SS=Stainless		PNC=Process No Color P_ _=Paint

Note:
Stainless upgrade includes stainless steel fasteners and pins on span wire clamp.

Note: 1. All assemblies are supplied standard with stainless slotted washer and fasteners, with galvanized hardware on span wire clamps. Stainless upgrade available.
2. See Reference Section page v for available paint colors.

ISO 9001
www.intlcert.com

Aluminum 1-Way Hanger Assemblies Tri-Stud

Pelco's Span Wire mountings are available in aluminum or iron with 1-1/2" NPS or tri-stud fittings. Balance adjusters provide additional adjustment capabilities, while tether assemblies may be used to anchor the bottom of signals in windy applications.

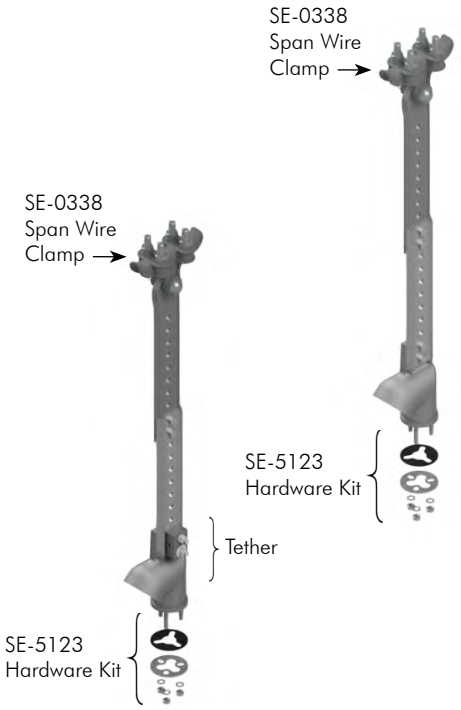

Span Wire Hanger Assy w/ Iron Span Wire Clamp, Tri-Stud & Adjustable Extender, Alum

SE-5072 - [Extender] - [Stainless Upgrade] - [Coating]

Extender: 06=6" Length, 11=11" Length, 19=19" Length, 40=40" Length, 48=48" Length, 72=72" Length

Stainless Upgrade: Blank=Galv, SS=Stainless

Coating: PNC=Process No Color, P_ _=Paint

Note:
Stainless upgrade includes stainless steel fasteners and pins on span wire clamp.

Span Wire Hanger Assy w/ Iron Span Wire Clamp, Tri-Stud, Adjustable Extender & Tether, Alum

SE-5024 - [Extender] - [Stainless Upgrade] - [Coating]

Extender: 06=6" Length, 11=11" Length, 19=19" Length, 40=40" Length, 48=48" Length, 72=72" Length

Stainless Upgrade: Blank=Galv, SS=Stainless

Coating: PNC=Process No Color, P_ _=Paint

Note:
Stainless upgrade includes stainless steel fasteners and pins on span wire clamp.

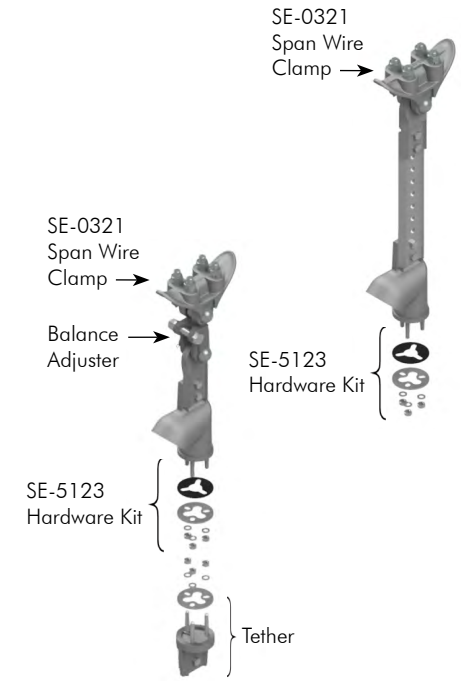

Span Wire Hanger Assy w/ Alum Span Wire Clamp, Tri-Stud, Alum

SE-5196 - [Extender] - [Bushing] - [Stainless Upgrade] - [Coating]

Extender: 06=6" Length, 11=11" Length, 19=19" Length, 40=40" Length, 48=48" Length, 72=72" Length

Bushing: Blank=None, SB=Stainless Bushing

Stainless Upgrade: Blank=Galv, SS=Stainless

Coating: PNC=Process No Color, P_ _=Paint

Note:
Stainless upgrade includes stainless steel fasteners and pins on span wire clamp.

Span Wire Hanger Assy w/ Alum Span Wire Clamp, Tri-Stud, Iron Balance Adjuster & Tether, Alum

SE-5073 - [Bushing] - [Stainless Upgrade] - [Coating]

Bushing: Blank=None, SB=Stainless Bushing

Stainless Upgrade: Blank=Galv, SS=Stainless

Coating: PNC=Process No Color, P_ _=Paint

Note:
Stainless upgrade includes stainless steel fasteners and pins on span wire clamp.

Note: 1. All assemblies are supplied standard with stainless slotted washer and fasteners, with galvanized hardware on span wire clamps. Stainless upgrade available.
2. See Reference Section page v for available paint colors.

Aluminum 2-Way, 3-Way & 4-Way Span Wire Hanger Assemblies

Pelco's Span Wire mountings are available in aluminum or iron with 1-1/2" NPS or tri-stud fittings. Balance adjusters provide additional adjustment capabilities, while tether assemblies may be used to anchor the bottom of signals in windy applications.

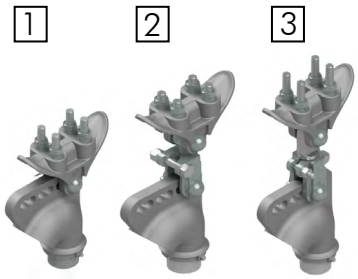

1. SE-3019- [Bushing] - [Stainless Upgrade] - [Coating] **1-1/2" NPS Span Wire Hanger**

2. SE-3272- [ ] - [ ] - [ ] **1-1/2" NPS Span Wire Hanger** w/ Iron Balance Adjuster

3. SE-3274- [ ] - [ ] - [ ] **1-1/2" NPS Span Wire Hanger** w/ PAL Balance Adjuster

Bushing: Blank=None, SB=Stainless Bushing
Stainless Upgrade: Blank=Galv, SS=Stainless
Coating: PNC=Process No Color, P_ _=Paint

Note: For use with upper and lower arm assemblies below.
Stainless upgrade includes stainless steel fasteners and pins on span wire clamp.

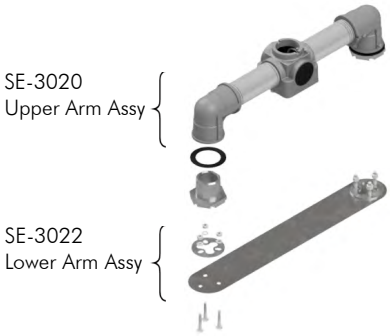

Upper & Lower Arm Assy, 2-Way 16-1/2" CTC, Alum

SE-3038 - [Coating]

PNC=Process No Color
P_ _=Paint

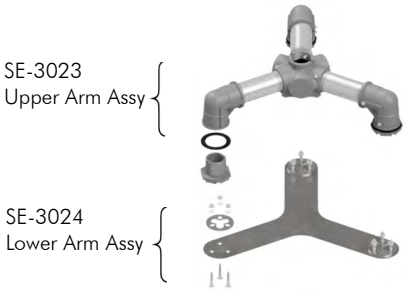

Upper & Lower Arm Assy, 3-Way 16-1/2" CTC, Alum

SE-3039 - [Coating]

PNC=Process No Color
P_ _=Paint

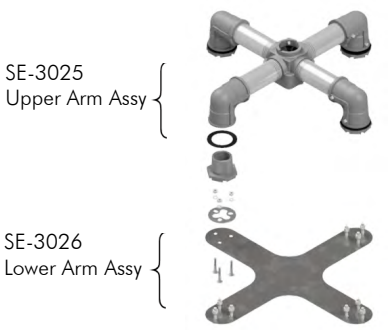

Upper & Lower Arm Assy, 4-Way 16-1/2" CTC, Alum

SE-3040 - [Coating]

PNC=Process No Color
P_ _=Paint

Note: 1. All assemblies are supplied standard with stainless slotted washer and fasteners, with galvanized hardware on span wire clamps. Stainless upgrade available.
2. See Reference Section page v for available paint colors.

ISO 9001 www.intlcert.com

FREE-SWINGING
PELCO PRODUCTS, INC.

Aluminum 2-Way, 3-Way & 4-Way Span Wire Hanger Assemblies

Pelco's Span Wire mountings are available in aluminum or iron with 1-1/2" NPS or tri-stud fittings. Balance adjusters provide additional adjustment capabilities, while tether assemblies may be used to anchor the bottom of signals in windy applications.

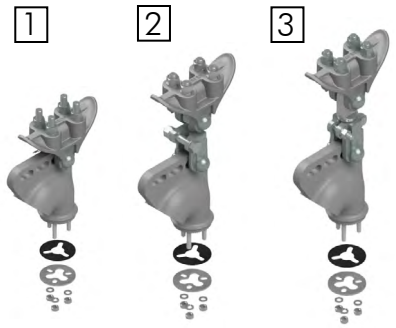

1. SE-5063- [Bushing] - [Stainless Upgrade] - [Coating] **Tri-Stud Span Wire Hanger**

2. SE-5088- [Bushing] - [Stainless Upgrade] - [Coating] **Tri-Stud Span Wire Hanger** w/ Iron Balance Adjuster

3. SE-5163- [Bushing] - [Stainless Upgrade] - [Coating] **Tri-Stud Span Wire Hanger** w/ PAL Balance Adjuster

Bushing: Blank=None, SB=Stainless Bushing
Stainless Upgrade: Blank=Galv, SS=Stainless
Coating: PNC=Process No Color, P_ _=Paint

Note: For use with upper and lower arm assemblies below.
Stainless upgrade includes stainless steel fasteners and pins on span wire clamp.

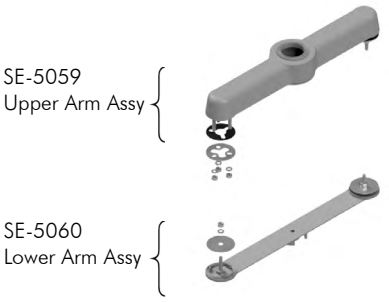

Upper & Lower Arm Assy, 2-Way 17" CTC, Cast Tri-Stud, Alum

SE-5061 - [Coating]

PNC=Process No Color
P_ _=Paint

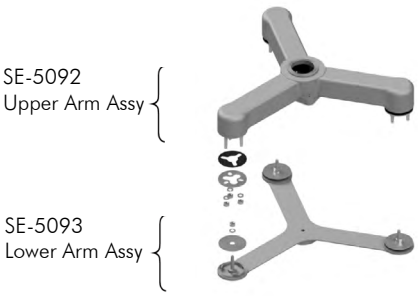

Upper & Lower Arm Assy, 3-Way 17" CTC, Cast Tri-Stud, Alum

SE-5094 - [Coating]

PNC=Process No Color
P_ _=Paint

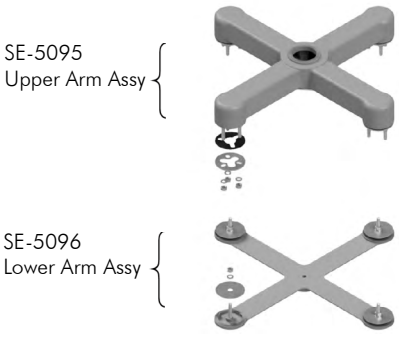

Upper & Lower Arm Assy, 4-Way 17" CTC, Cast Tri-Stud, Alum

SE-5097 - [Coating]

PNC=Process No Color
P_ _=Paint

Note: 1. All assemblies are supplied standard with stainless slotted washer and fasteners, with galvanized hardware on span wire clamps. Stainless upgrade available.
2. See Reference Section page v for available paint colors.

Aluminum 5-Section Cluster Span Wire Hanger Assemblies

Pelco's Span Wire mountings are available in aluminum or iron with 1-1/2" NPS or tri-stud fittings. Balance adjusters provide additional adjustment capabilities, while tether assemblies may be used to anchor the bottom of signals in windy applications.

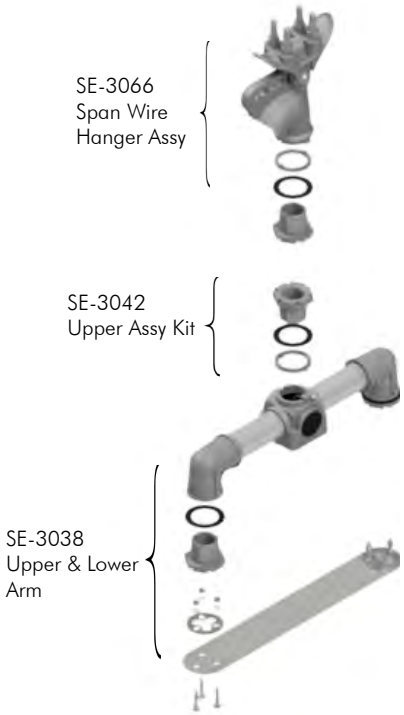

Cluster Assy, 5-Section 16-1/2" CTC, Cast Nipple, Alum

SE-3120 - [Bushing] - [Stainless Upgrade] - [Coating]

- Bushing: Blank=None; SS=Stainless Bushing
- Stainless Upgrade: Blank=Galv; SS=Stainless
- Coating: PNC=Process No Color; P_ _=Paint

Note:
Stainless upgrade includes stainless steel fasteners and pins on span wire clamp.

Cluster Assy, 5-Section 16-1/2" CTC, Cast Nipple, Alum

SE-3137 - [Bushing] - [Stainless Upgrade] - [Coating]

- Bushing: Blank=None; SS=Stainless Bushing
- Stainless Upgrade: Blank=Galv; SS=Stainless
- Coating: PNC=Process No Color; P_ _=Paint

Note:
Stainless upgrade includes stainless steel fasteners and pins on span wire clamp.

Note: 1. All assemblies are supplied standard with stainless slotted washer and fasteners, with galvanized hardware on span wire clamps. Stainless upgrade available.
2. See Reference Section page v for available paint colors.

ISO 9001 www.intlcert.com

FREE-SWINGING
PELCO PRODUCTS, INC.

Aluminum 5-Section Cluster Span Wire Hanger Assemblies

Pelco's Span Wire mountings are available in aluminum or iron with 1-1/2" NPS or tri-stud fittings. Balance adjusters provide additional adjustment capabilities, while tether assemblies may be used to anchor the bottom of signals in windy applications.

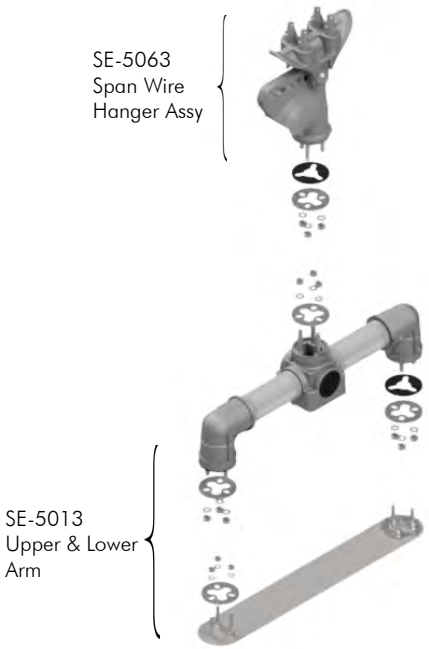

Cluster Assy, 5-Section 16-1/2" CTC, Cast Nipple, Alum

	Bushing		Stainless Upgrade		Coating
SE-5166 -	☐	-	☐	-	☐
	Blank=None SS=Stainless Bushing		Blank=Galv SS=Stainless		PNC=Process No Color P_ _=Paint

Note:
Stainless upgrade includes stainless steel fasteners and pins on span wire clamp.

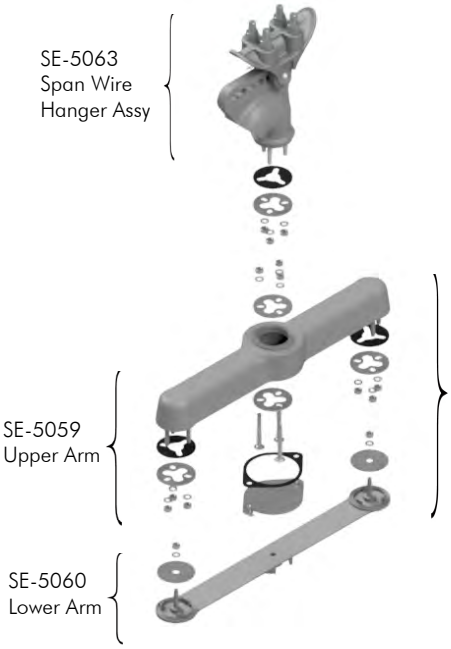

Cluster Assy, 5-Section 17" CTC, Cast Nipple, Alum

	Bushing		Stainless Upgrade		Coating
SE-5165 -	☐	-	☐	-	☐
	Blank=None SS=Stainless Bushing		Blank=Galv SS=Stainless		PNC=Process No Color P_ _=Paint

Note:
Stainless upgrade includes stainless steel fasteners and pins on span wire clamp.

Note: 1. All assemblies are supplied standard with stainless slotted washer and fasteners, with galvanized hardware on span wire clamps. Stainless upgrade available.
2. See Reference Section page v for available paint colors.

12 Circuit Disconnect Hanger Assemblies

Pelco's Disconnect Hangers are available in 12-circuit and 18-circuit with 1-1/2" NPS threaded or slip top and 1-1/2" NPS threaded or tri-stud bottom hubs.

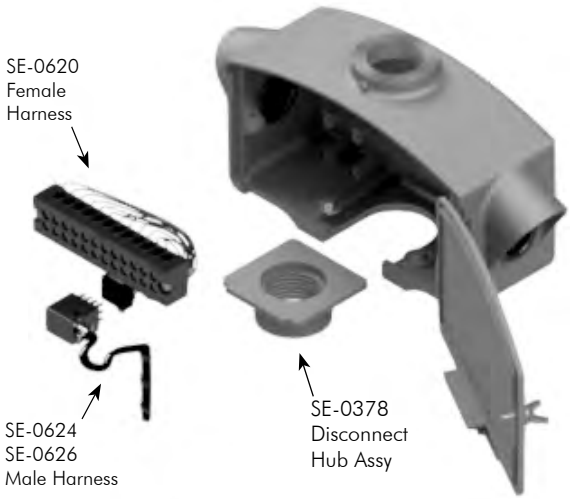

Disconnect Hanger, 12-Circuit 1-1/2" NPS Top & Bottom Hub w/ 4' Harness, Alum

SE-3073 - [ ] Coating

PNC=Process No Color
P__=Paint

Disconnect Hanger, 12-Circuit 1-1/2" NPS Top & Bottom Hub w/ 7' Harness, Alum

SE-3195 - [ ] Coating

PNC=Process No Color
P__=Paint

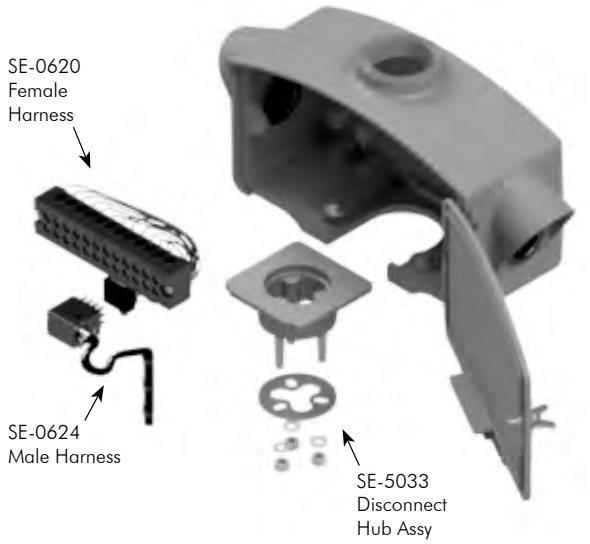

Disconnect Hanger, 12-Circuit 2" Slip Top & Tri-Stud Bottom Hub w/ 4' Harness, Alum

SE-5031 - [ ] Coating

PNC=Process No Color
P__=Paint

Note: 1. All harnesses come with 18 AWG wire pre-tinned and numbered on 3" centers.
2. All assemblies are supplied standard with stainless steel slotted washers and fasteners.
3. See Reference Section page v for available paint colors.

ISO 9001 www.intlcert.com

18 Circuit Disconnect Hanger Assemblies

Pelco's Disconnect Hangers are available in 12-circuit and 18-circuit with 1-1/2" NPS threaded or slip top and 1-1/2" NPS threaded or tri-stud bottom hubs.

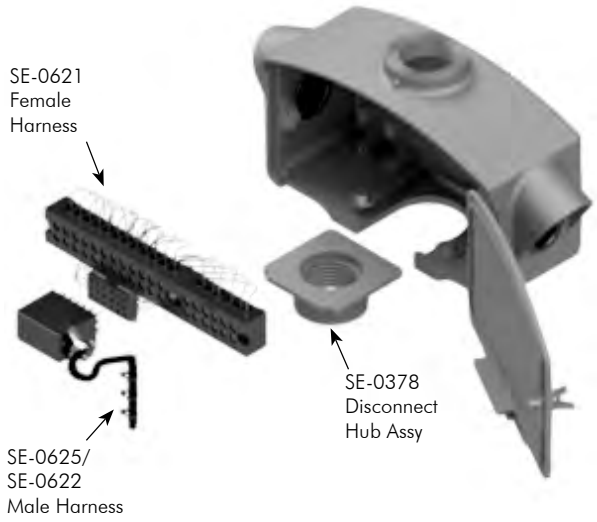

Disconnect Hanger, 18-Circuit 1-1/2" NPS Top & Bottom Hub w/ 4' Harness, Alum

SE-3077 - [ ] Coating

PNC=Process No Color
P_ _=Paint

Disconnect Hanger, 18-Circuit 1-1/2" NPS Top & Bottom Hub w/ 7' Harness

SE-3196 - [ ] Coating

PNC=Process No Color
P_ _=Paint

Disconnect Hanger, 18-Circuit 2" Slip Top & Tri-Stud Bottom Hub w/ 4' Harness, Alum

SE-5032 - [ ] Coating

PNC=Process No Color
P_ _=Paint

Note: 1. All harnesses come with 18 AWG wire pre-tinned and numbered on 3" centers.
2. All assemblies are supplied standard with stainless steel slotted washers and fasteners.
3. See Reference Section page v for available paint colors.

Span Wire Terminal Compartment

Pelco's Disconnect Hangers are available in 12-circuit and 18-circuit with 1-1/2" NPS threaded or slip top and 1-1/2" NPS threaded or tri-stud bottom hubs.

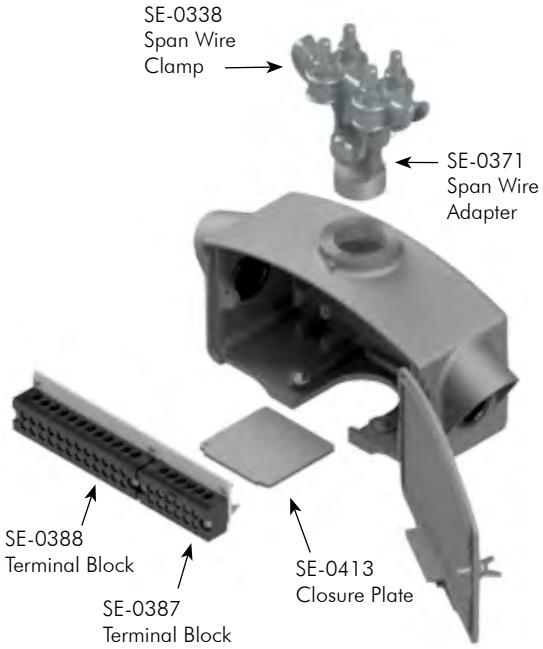

Span Wire Terminal Compartment, 18-Circuit w/ Iron Hanger Assembly, Alum

SE-3092 - [Stainless Upgrade] - [Coating]

Stainless Upgrade: Blank=Galv, SS=Stainless

Coating: PNC=Process No Color, P_ _=Paint

Note:
Stainless upgrade includes stainless steel fasteners and pins on span wire clamp.

Cable Clamp Kit, 2-Cable, Alum

SE-4201 - [Coating]

PNC=Process No Color
P_ _=Paint

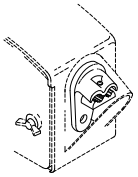

Note: 1. All assemblies are supplied standard with stainless slotted washer and fasteners, with galvanized hardware on span wire clamps. Stainless upgrade available.
2. See Reference Section page v for available paint colors.

ISO 9001 www.intlcert.com

FREE-SWINGING

PELCO PRODUCTS, INC.

Hanger Assemblies

Various hanger assemblies are available for mounting Disconnects. Assemblies are available with or without span wire clamps, balance adjusters, extenders, and tethers, fitting any specific requirement.

Hanger Assy, Span Wire Adapter, 1-1/2" NPS, Alum

SE-5215 - [Bushing] - [Stainless Upgrade] - [Coating]

Bushing: Blank=None, SS=Stainless Bushing
Stainless Upgrade: Blank=Galv, SS=Stainless
Coating: PNC=Process No Color, P_ _=Paint

Note:
Stainless upgrade includes stainless steel fasteners and pins on span wire clamp.

SE-5123 Hardware Kit

Hanger Assy, Span Wire, Tri-Stud Balance Adjuster, Alum

SE-5216 - [Bushing] - [Stainless Upgrade] - [Coating]

Bushing: Blank=None, SS=Stainless Bushing
Stainless Upgrade: Blank=Galv, SS=Stainless
Coating: PNC=Process No Color, P_ _=Paint

Note:
Stainless upgrade includes stainless steel fasteners and pins on span wire clamp.

SE-5123 Hardware Kit

Balance Assy, Tri-Stud, 3/4" Width, Alum

SE-5034 - [Bushing] - [Coating]

Bushing: Blank=None, SS=Stainless Bushing
Coating: PNC=Process No Color, P_ _=Paint

SE-5123 Hardware Kit

Hanger Assy, Span Wire, Tri-Stud Connector, Alum

SE-5217 - [Bushing] - [Stainless Upgrade] - [Coating]

Bushing: Blank=None, SS=Stainless Bushing
Stainless Upgrade: Blank=Galv, SS=Stainless
Coating: PNC=Process No Color, P_ _=Paint

Note:
Stainless upgrade includes stainless steel fasteners and pins on span wire clamp.

SE-5123 Hardware Kit

Hanger Assy, Tri-Stud, 1/2" Width, Alum

SE-5036 - [Bushing] - [Coating]

Bushing: Blank=None, SS=Stainless Bushing
Coating: PNC=Process No Color, P_ _=Paint

Note: 1. All assemblies are supplied standard with stainless slotted washer and fasteners, with galvanized hardware on span wire clamps. Stainless upgrade available.
2. See Reference Section page v for available paint colors.

Hanger Assemblies

Various hanger assemblies are available for mounting Disconnects. Assemblies are available with or without span wire clamps, balance adjusters, extenders, and tethers, fitting any specific requirement.

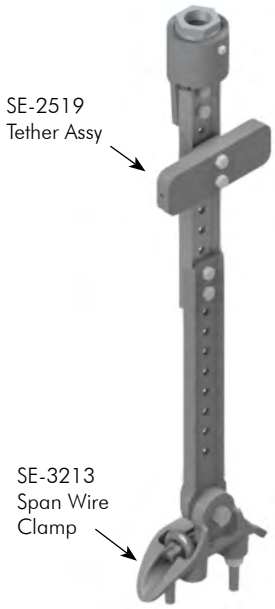

Hanger Assy, Opticom Preemption, 1" NPT w/ Span Wire Clamp & Tether, Alum

	Extender		Stainless Upgrade		Coating
SE-3333 -	☐	-	☐	-	☐
	Blank=None 11=11" Extender 19=19" Extender 40=40" Extender 72=72" Extender		Blank=Galv SS=Stainless		PNC=Process No Color P_ _=Paint

Note:
Stainless upgrade includes stainless steel fasteners and pins on span wire clamp.

Note: 1. All assemblies are supplied standard with stainless slotted washer and fasteners, with galvanized hardware on span wire clamps. Stainless upgrade available.
2. See Reference Section page v for available paint colors.

ISO 9001
www.intlcert.com

Hanger Assemblies

Various hanger assemblies are available for mounting Disconnects. Assemblies are available with or without span wire clamps, balance adjusters, extenders, and tethers, fitting any specific requirement.

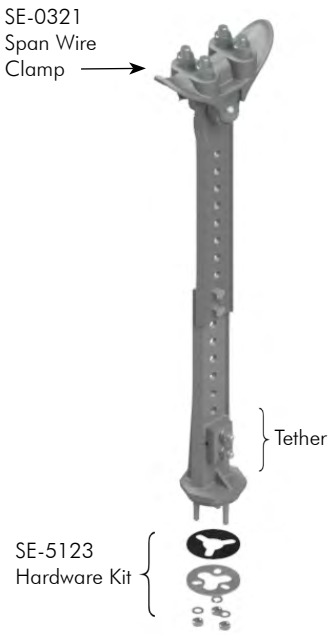

Hanger Assy, Tri-Stud Adjustable Span Wire Clamp & Tether, Alum

SE-5118 - [Bushing] - [Stainless Upgrade] - [Coating]

- Bushing: Blank=None; SS=Stainless Bushing
- Stainless Upgrade: Blank=Galv; SS=Stainless
- Coating: PNC=Process No Color; P_ _=Paint

Note:
Stainless upgrade includes stainless steel fasteners and pins on span wire clamp.

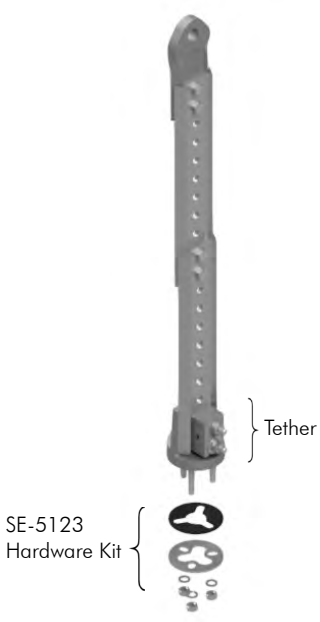

Hanger Assy, Tri-Stud Adjustable Tether, Alum

SE-5055 - [Bushing] - [Coating]

- Bushing: Blank=None; SS=Stainless Bushing
- Coating: PNC=Process No Color; P_ _=Paint

Note:
Stainless upgrade includes stainless steel fasteners and pins on span wire clamp.

Note: 1. All assemblies are supplied standard with stainless slotted washer and fasteners, with galvanized hardware on span wire clamps. Stainless upgrade available.
2. See Reference Section page v for available paint colors.

Aluminum Horizontal Span Wire Assemblies

Horizontal assemblies are available with aluminum or iron span wire clamps, wire outlet body, and CGB option for up to a 5-section signal.

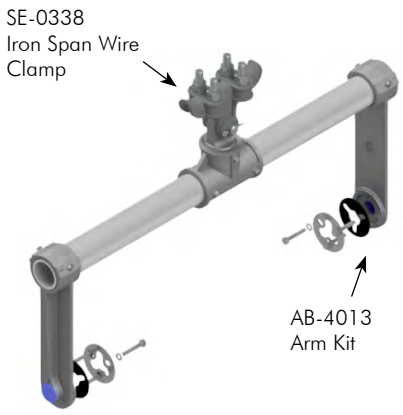

Horizontal Span Wire Assy w/ Slip Tee, Iron Clamp, Alum

	Signal Section		CGB		Stainless Upgrade		Coating
AB-0127 -	☐	-	☐	-	☐	-	☐
	1=1 Sec 2=2 Sec 3=3 Sec 4=4 Sec 5=5 Sec		Blank=None 1=0.55″-0.65″ Wire 2=0.56″-0.65″ Wire		Blank=Galv SS=Stainless		PNC=Process No Color P_ _=Paint

Note:
Stainless upgrade includes stainless steel fasteners and pins on span wire clamp.

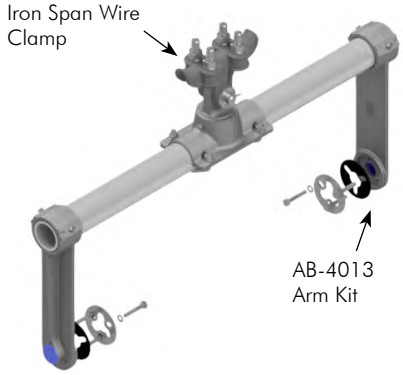

Horizontal Span Wire Assy w/ Tube Saddle, Iron Clamp, Alum

	Signal Section		CGB		Stainless Upgrade		Coating
AB-0123 -	☐	-	☐	-	☐	-	☐
	1=1 Sec 2=2 Sec 3=3 Sec 4=4 Sec 5=5 Sec		Blank=None 1=0.55″-0.65″ Wire 2=0.56″-0.65″ Wire		Blank=Galv SS=Stainless		PNC=Process No Color P_ _=Paint

Note:
Stainless upgrade includes stainless steel fasteners and pins on span wire clamp.

Note: 1. All assemblies are supplied standard with stainless slotted washer and fasteners, with galvanized hardware on span wire clamps. Stainless upgrade available.
2. See Reference Section page v for available paint colors.

ISO 9001
www.intlcert.com

Aluminum Horizontal Span Wire Assemblies

Horizontal assemblies are available with aluminum or iron span wire clamps, wire outlet body, and CGB option for up to a 5-section signal.

SE-0321
Alum Span Wire
Clamp

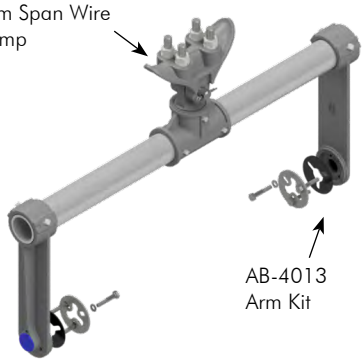

AB-4013
Arm Kit

Horizontal Span Wire Assy w/ Slip Tee, Alum Clamp, Alum

	Signal Section		CGB		Stainless Upgrade		Coating
AB-0126 -	☐	-	☐	-	☐	-	☐
	1=1 Sec 2=2 Sec 3=3 Sec 4=4 Sec 5=5 Sec		Blank=None 1=0.55"-0.65" Wire 2=0.56"-0.65" Wire		Blank=Galv SS=Stainless		PNC=Process No Color P_ _=Paint

Note:
Stainless upgrade includes stainless steel fasteners and pins on span wire clamp.

SE-0321
Alum Span Wire
Clamp

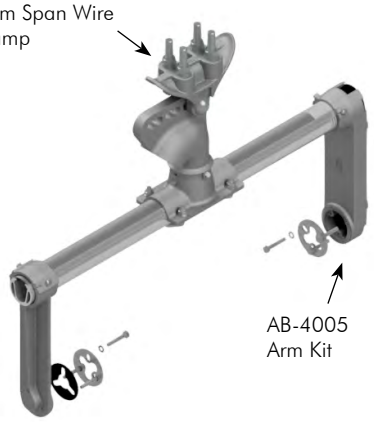

AB-4005
Arm Kit

Horizontal Span Wire Assy w/ Wire Outlet Body, Alum Clamp, Alum

	Signal Section		Bushing		Stainless Upgrade		Coating
AB-0122 -	☐	-	☐	-	☐	-	☐
	1=1 Sec 2=2 Sec 3=3 Sec 4=4 Sec 5=5 Sec		Blank=None SS=Stainless Bushing		Blank=Galv SS=Stainless		PNC=Process No Color P_ _=Paint

Note:
Stainless upgrade includes stainless steel fasteners and pins on span wire clamp.

Note: 1. All assemblies are supplied standard with stainless slotted washer and fasteners, with galvanized hardware on span wire clamps. Stainless upgrade available.
2. See Reference Section page v for available paint colors.

This page is intentionally left blank.

ISO 9001
www.intlcert.com

Iron 1-Way Hanger Assemblies

Pelco's Span Wire mountings are available in aluminum or iron with 1-1/2" NPS or tri-stud fittings. Balance adjusters provide additional adjustment capabilities, while tether assemblies may be used to anchor the bottom of signals in windy applications.

Hanger Assy, Tri-Stud, Iron

SE-5090 - [ ]
Coating
P_ _=Paint

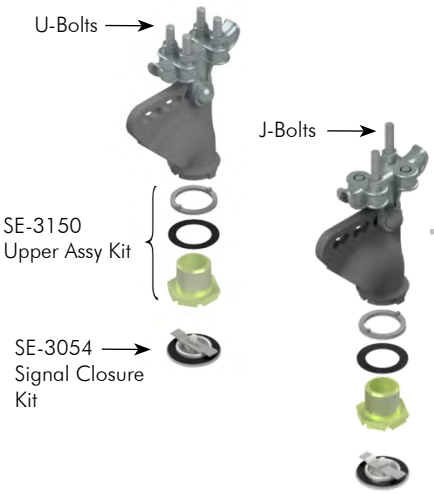

Span Wire Hanger Assy, Iron w/ Signal Closure Kit U-Bolts

SE-3139 - [ ] - [ ]
Stainless Upgrade: Blank=Galv, SS=Stainless
Coating: P_ _=Paint

Note:
Stainless upgrade includes stainless steel fasteners and pins on span wire clamp.

Span Wire Hanger Assy, Iron w/ Signal Closure Kit J-Bolts

SE-3250 - [ ] - [ ]
Stainless Upgrade: Blank=Galv, SS=Stainless
Coating: P_ _=Paint

Note:
Stainless upgrade includes stainless steel fasteners and pins on span wire clamp.

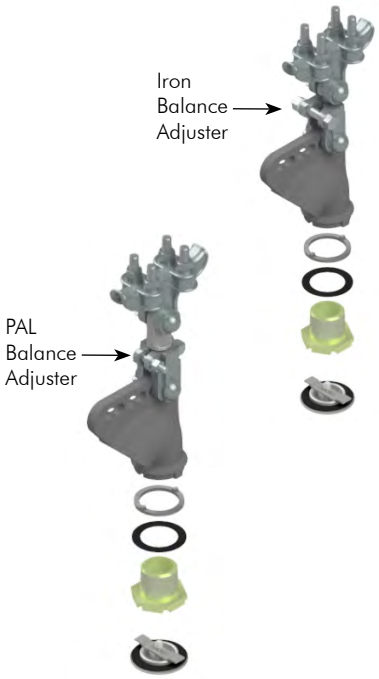

Span Wire Hanger Assy, Iron w/ Signal Closure Kit Iron Balance Adjuster

SE-3151 - [ ] - [ ]
Stainless Upgrade: Blank=Galv, SS=Stainless
Coating: P_ _=Paint

Note:
Stainless upgrade includes stainless steel fasteners and pins on span wire clamp.

Span Wire Hanger Assy, Iron w/ Signal Closure Kit PAL Balance Adjuster

SE-3277 - [ ] - [ ]
Stainless Upgrade: Blank=Galv, SS=Stainless
Coating: P_ _=Paint

Note:
Stainless upgrade includes stainless steel fasteners and pins on span wire clamp.

Note: 1. All assemblies are supplied standard with stainless slotted washer and fasteners, with galvanized hardware on span wire clamps. Stainless upgrade available.
2. See Reference Section for available paint colors.

Iron 2-Way, 3-Way & 4-Way Span Wire Hanger Assemblies

Pelco's Span Wire mountings are available in aluminum or iron with 1-1/2" NPS or tri-stud fittings. Balance adjusters provide additional adjustment capabilities, while tether assemblies may be used to anchor the bottom of signals in windy applications.

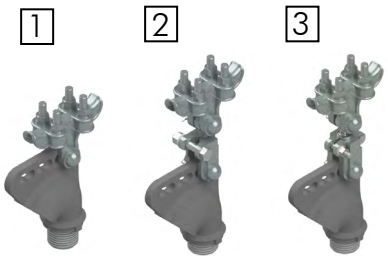

Stainless Upgrade | Coating

1. SE-3070 - [ ] - [ ] **1-1/2" NPS Span Wire Hanger**

2. SE-3273 - [ ] - [ ] **1-1/2" NPS Span Wire Hanger** w/ Balance Adjuster

3. SE-3275 - [ ] - [ ] **1-1/2" NPS Span Wire Hanger** w/ PAL Balance Adjuster

Blank=Galv, SS=Stainless | P__=Paint

Note: For use with upper and lower arm assemblies below.
Stainless upgrade includes stainless steel fasteners and pins on span wire clamp.

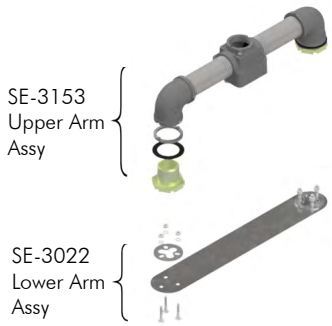

Upper & Lower Arm Assy, 2-Way 16-1/2" CTC Iron

SE-3154 - [ ] Coating

P__=Paint

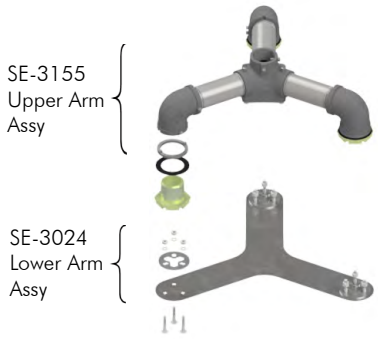

Upper & Lower Arm Assy, 3-Way 16-1/2" CTC Iron

SE-3156 - [ ] Coating

P__=Paint

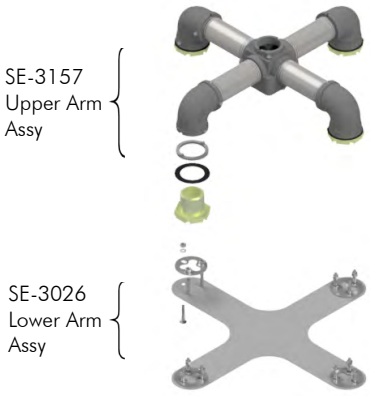

Upper & Lower Arm Assy, 4-Way 16-1/2" CTC Iron

SE-3158 - [ ] Coating

P__=Paint

Note: 1. All assemblies are supplied standard with stainless slotted washer and fasteners, with galvanized hardware on span wire clamps. Stainless upgrade available.
2. See Reference Section page v for available paint colors.

ISO 9001 www.intlcert.com

FREE-SWINGING

PELCO PRODUCTS, INC.

Iron 5-Section Cluster Span Wire Hanger Assemblies

Pelco's Span Wire mountings are available in aluminum or iron with 1-1/2" NPS or tri-stud fittings. Balance adjusters provide additional adjustment capabilities, while tether assemblies may be used to anchor the bottom of signals in windy applications.

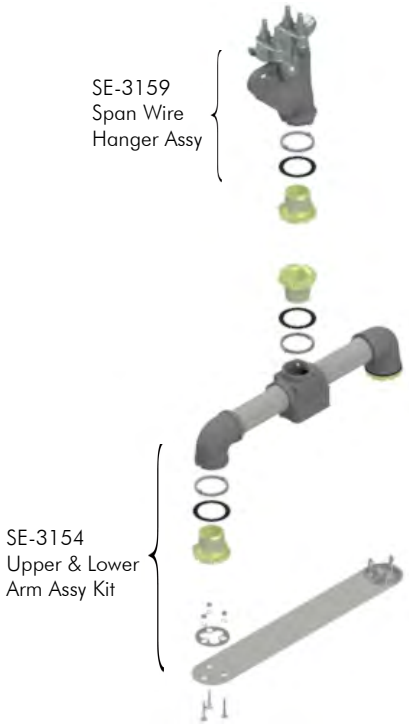

Cluster Assy, 5-Section 16-1/2" CTC Iron

SE-3160 - [Stainless Upgrade: Blank=Galv, SS=Stainless] - [Coating: P_ _=Paint]

Note:
Stainless upgrade includes stainless steel fasteners and pins on span wire clamp.

Cluster Assy, 5-Section 16-1/2" CTC Iron

SE-3161 - [Stainless Upgrade: Blank=Galv, SS=Stainless] - [Coating: P_ _=Paint]

Note:
Stainless upgrade includes stainless steel fasteners and pins on span wire clamp.

Note: 1. All assemblies are supplied standard with stainless slotted washer and fasteners, with galvanized hardware on span wire clamps. Stainless upgrade available.
2. See Reference Section page v for available paint colors.

Signal Accessories

Pelco offers various accessories for span wire mounted signs and signals. See Section T14 Components for additional products available.

Lower Arm Assy, 2-Way, 16-1/2" CTC, Steel

SE-3162 - [ ] Coating

P_ _=Paint

Lower Arm Assy, 3-Way, 16-1/2" CTC, Steel

SE-3163 - [ ] Coating

P_ _=Paint

Lower Arm Assy, 4-Way, 16-1/2" CTC, Steel

SE-3164 - [ ] Coating

P_ _=Paint

Tether Assembly, Extended Bottom, Alum

SE-3307 - [ ] Length - [ ] Coating

6=6"
18=18"
28=28"

PNC=Process No Color
P_ _=Paint

SE-3055-ZN1 **Tether Assembly, Steel Break-Away, 1-1/2" Pipe**

SE-3293-PNC **Tether Assembly, Alum Non-Break-Away**

Note: 1. All assemblies are supplied standard with stainless slotted washer and fasteners.
2. See Reference Section pave v for available paint colors.

ISO 9001 www.intlcert.com

Signal Accessories

Pelco offers various accessories for span wire mounted signs and signals. See Section T14 Components for additional products available.

Tether Assembly, 1-1/2" Break-Away, Alum

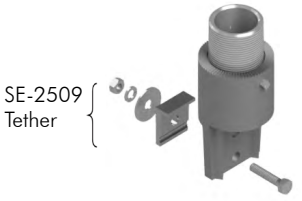

SE-5121 - [Extender] - [Coating]

Extender: Blank=No Extender, 11=11", 19=19", 72=72"

Coating: PNC=Process No Color, P_ _=Paint

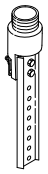

Note: Available with or without Extender Bar.

Tether Assembly, Tri-Stud Break-Away, Alum

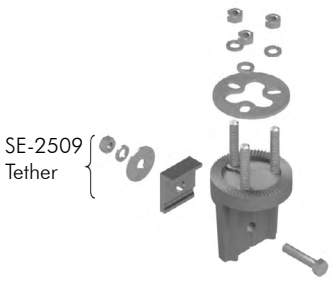

SE-5050 - [Extender] - [Coating]

Extender: Blank=No Extender, 11=11", 19=19", 72=72"

Coating: PNC=Process No Color, P_ _=Paint

Note: Available with or without Extender Bar.

Tether Assembly, Single-Stud Break-Away, Alum

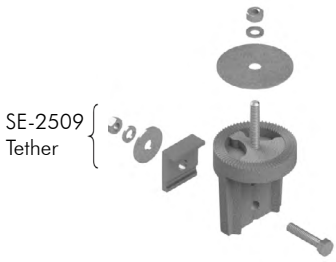

SE-5058 - [Extender] - [Coating]

Extender: Blank=No Extender, 11=11", 19=19", 72=72"

Coating: PNC=Process No Color, P_ _=Paint

Note: Available with or without Extender Bar.

Extender Bar, Aluminum

SE-0507 - [Length] - [Coating]

Length: 11=11", 19=19", 40=40", 72=72"

Coating: PNC=Process No Color, P_ _=Paint

Note: 1. All assemblies are supplied standard with stainless slotted washer and fasteners.
2. See Reference Section page v for available paint colors.

Signal Accessories

Pelco offers various accessories for span wire mounted signs and signals. See Section T14 Components for additional products available.

Signal Spacer Kit w/ Aluminum Nipple, Alum Lockring, Alum Cast Nipple

SE-3306 - [Length] - [Coating]

Length: Nipple Length

Coating: PNC=Process No Color; P_ _=Paint

Signal Spacer Kit w/ Steel Nipple, Brass Lockring, Iron Cast Nipple

SE-3302 - [Length] - [Cast Nipple] - [Coating]

Length: Nipple Length

Cast Nipple: LCN=Long Cast Nipple

Coating: P_ _=Paint

Signal Spacer Kit w/ Aluminum Nipple, Tri-Stud

SE-5218 - [Length] - [Coating]

Length: 06=3-1/4" Nipple; 12=9-1/4" Nipple; 14=11-1/4" Nipple; 22=19-1/4" Nipple; 28=25-1/4" Nipple

Coating: P_ _=Paint

SM-0906-ZN2 **Opticom Cable Hanger, 1/2" Wire, 7/16"-14 x 3/4"-14 NPT, Iron, Zinc 2**

SE-4028-ZN1 **CGB 3/4", .55"-.65" Wire Range, Zinc 1**

SE-0490-ZN1 **CGB, 3/4", .625"-.75" Wire Range, Zinc 1**

SE-4216-ZN1 **CGB, 1", .55"-.625" Wire Range, Zinc 1**

Note: 1. All assemblies are supplied standard with stainless slotted washer and fasteners.
2. See Reference Section page v for available paint colors.

ISO 9001 www.intlcert.com

FREE-SWINGING

PELCO PRODUCTS, INC.

Span Wire Hardware Kits

SE-5123-SS **Tri-Stud Hardware Kit w/ Gasket, 5/16”-18 Stainless Slotted Washer & Stainless Hardware**

SE-5122-SS **Tri-Stud Hardware Kit w/o Gasket, 5/16”-18 Stainless Slotted Washer & Stainless Hardware**

SE-5125-SS **Tri-Bolt Hardware Kit w/ Gasket, 5/16”-18 x 1-1/2” Hex Hd Bolts Stainless Slotted Washer & Stainless Hardware**

SE-5126-SS **Tri-Bolt Hardware Kit w/o Gasket, 5/16”-18 x 1-1/2” Hex Hd Bolts Stainless Slotted Washer & Stainless Hardware**

Note: 1. All kits are supplied standard with stainless steel slotted washers and fasteners.
2. See Section T14 for additional components available.

Span Wire Hardware Kits

SE-4112-SS **Signal to Signal Mounting Kit,**
5/16"-18 x 2-1/2" Carriage Bolts
Stainless Slotted Washer & Stainless Hardware

SE-3282-SS **Plumbizer Hardware Kit,**
5/16"-18 x 3-1/2" Carriage Bolts
Stainless Slotted Washer & Stainless Hardware

SE-4111-SS **Tri-Bolt Hardware Kit w/ Gasket,**
1/4"-20 x 1-1/2" Hex Hd Bolts
Stainless Slotted Washer & Stainless Hardware

SE-3227-SS **Lower Assembly Kit,**
1/4"-20 x 1-1/2" Carriage Bolts
Stainless Slotted Washer & Stainless Hardware

SE-5064-SS **Single-Stud Hardware Kit, 5/16"-18**
Stainless Washer & Stainless Hardware

Note: 1. All kits are supplied standard with stainless steel slotted washers and fasteners.
2. See Section T14 for additional components available.

ISO 9001 www.intlcert.com

FREE-SWINGING
PELCO PRODUCTS, INC.

Aluminum 1-Way Side-of-Pole with Cast Nipples

Pelco's Side-of-Pole assemblies are designed to mount traffic and pedestrian signals on the side of traffic signal poles using an upper and lower arm. Available in aluminum or iron, and 1-1/2" NPS, tri-bolt, or tri-stud, and a vast array of hubs to accommodate both 1-way or 2-way signal configurations.

SE-3000-L
Upper Arm Assy

SE-3001-L
Lower Arm Assy

1-Way Upper & Lower Arm Assy, Alum Nipples, Alum

SE-3036 - [Nipple Length] - [Coating]

Nipple Length:
06=6"
08=8"
10=10"
12=12"
14=14"

Coating:
PNC=Process No Color
P_ _=Paint

Note:
For available hub plates see Components page T14-17 through T14-20.

SE-3351-10
Upper Arm Assy

SE-3352-10
Lower Arm Assy

1-Way Upper & Lower Arm Assy, 10" Nipples, Universal Hub Plates, Alum

SE-3215 - 10 - [Coating]

Coating:
PNC=Process No Color
P_ _=Paint

SE-3353-10
Upper Arm Assy

SE-3354-10
Lower Arm Assy

1-Way Upper & Lower Arm Assy, 10" Nipples, Large Pole Hub Plates, Alum

SE-3148 - [Coating]

Coating:
PNC=Process No Color
P_ _=Paint

Note: 1. All assemblies are supplied standard with stainless steel fasteners.
2. See Reference Section page v for available paint colors.

Aluminum 1-Way Side-of-Pole ICC Ped Head with Cast Nipples

Pelco's Side-of-Pole assemblies are designed to mount traffic and pedestrian signals on the side of traffic signal poles using an upper and lower arm. Available in aluminum or iron, and 1-1/2" NPS, tri-bolt, or tri-stud, and a vast array of hubs to accommodate both 1-way or 2-way signal configurations.

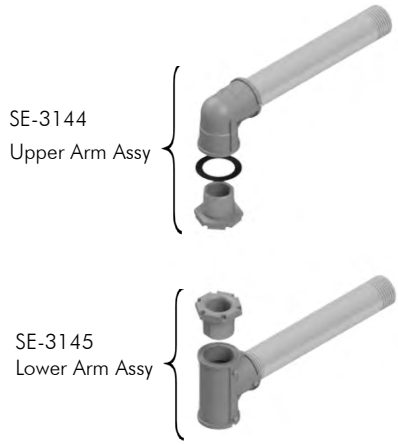

1-Way Upper & Lower ICC Ped Arm Assy, 12" Nipples, Alum

SE-3146 - [ ] Coating

PNC=Process No Color
P_ _=Paint

Note:
For available hub plates see Components page T14-17 through T14-20.

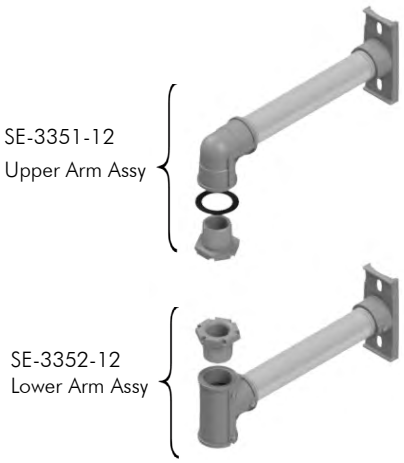

1-Way Upper & Lower ICC Ped Arm Assy, 12" Nipples, Universal Hub Plates, Alum

SE-3214 - [ ] Coating

PNC=Process No Color
P_ _=Paint

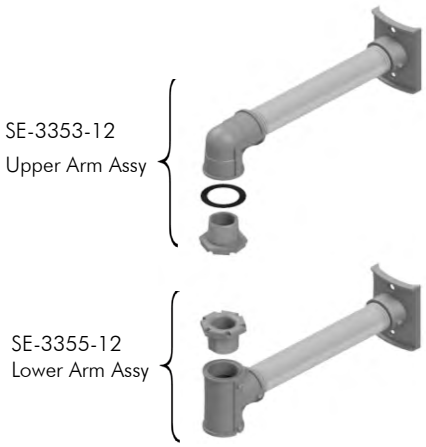

1-Way Upper & Lower ICC Ped Arm Assy, 12" Nipples, Large Pole Hub Plates, Alum

SE-3308 - [ ] Coating

PNC=Process No Color
P_ _=Paint

Note: 1. All assemblies are supplied standard with stainless steel fasteners.
2. See Reference Section page v for available paint colors.

ISO 9001 www.intlcert.com

Aluminum 2-Way Side-of-Pole with Cast Nipples

Pelco's Side-of-Pole assemblies are designed to mount traffic and pedestrian signals on the side of traffic signal poles using an upper and lower arm. Available in aluminum or iron, and 1-1/2" NPS, tri-bolt, or tri-stud, and a vast array of hubs to accommodate both 1-way or 2-way signal configurations.

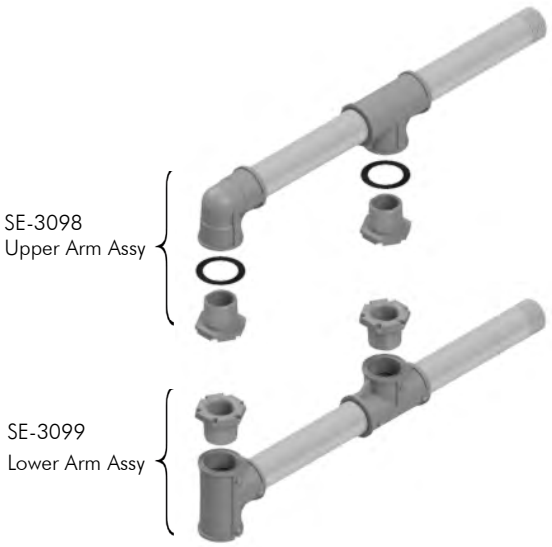

2-Way Upper & Lower Tandem Arm Assy, 10" Nipples, Alum

SE-3100 - [ ] Coating

PNC=Process No Color
P_ _=Paint

Note:
For available hub plates see Components page T14-17 through T14-20.

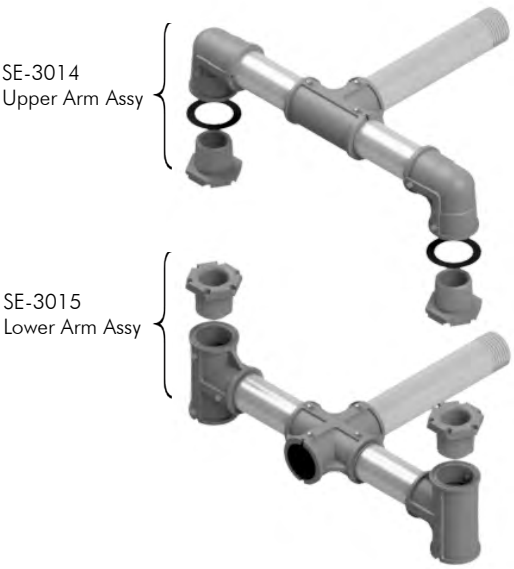

2-Way Upper & Lower Arm Assy, 16-1/2" CTC, Alum

SE-3075 - [ ] Coating

PNC=Process No Color
P_ _=Paint

Note:
For available hub plates see Components page T14-17 through T14-20.

Note: 1. All assemblies are supplied standard with stainless steel fasteners.
2. See Reference Section page v for available paint colors.

Aluminum 1 & 2-Way Side-of-Pole, Tri-Stud

Pelco's Side-of-Pole assemblies are designed to mount traffic and pedestrian signals on the side of traffic signal poles with an upper and lower arm. Available in aluminum or iron, and 1-1/2" NPS, tri-bolt, or tri-stud, and a vast array of hubs to accommodate both 1-way or 2-way signal configurations.

SE-5000
Tri-Stud Upper
Arm Assy

SE-5001
Tri-Stud Lower
Arm Assy

1-Way Upper & Lower Arm Assy, 10" Nipples, Alum

SE-5002 - [ ]

Coating
PNC=Process No Color
P_ _=Paint

Note:
For available hub plates see Components page T14-17 through T14-20.

SE-5000
Tri-Stud Upper
Arm Assy

SE-5108
Tri-Stud Lower
Arm Assy

1-Way Upper & Lower Arm Assy, 10" Nipples w/ Adjustable Lower Arm Alum

SE-5109 - [ ]

Coating
PNC=Process No Color
P_ _=Paint

Note:
For available hub plates see Components page T14-17 through T14-20.

SE-5009
Tri-Stud Upper
Arm Assy

SE-5010
Tri-Stud Lower
Arm Assy

2-Way Upper & Lower Arm Assy, 16-1/2" CTC, Alum

SE-5011 - [ ]

Coating
PNC=Process No Color
P_ _=Paint

Note:
For available hub plates see Components page T14-17 through T14-20.

Note: 1. All assemblies are supplied standard with stainless steel slotted washer and fasteners.
2. See Reference Section page v for available paint colors.

Aluminum Side-of-Pole

Pelco's Side-of-Pole assemblies are designed to mount traffic and pedestrian signals on the side of traffic signal poles with an upper and lower arm. Available in aluminum or iron, and 1-1/2" NPS, tri-bolt, or tri-stud, and a vast array of hubs to accommodate both 1-way or 2-way signal configurations.

1-Way Tri-Stud for 8" & 12" Signals, Alum for 4-1/2" OD Pole

SE-0567 - [ ] Coating

PNC=Process No Color
P_ _=Paint

2-Way Tri-Stud for 8" & 12" Signals, Alum for 4-1/2" OD Pole

SE-5186 - [ ] Coating

PNC=Process No Color
P_ _=Paint

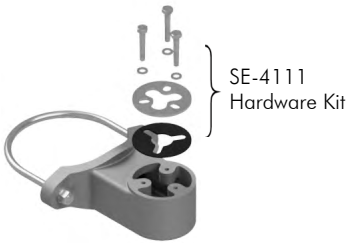

1-Way Tri-Bolt for 8" Signals, Alum for 4-1/2" OD Pole

SE-5053 - [ ] Coating

PNC=Process No Color
P_ _=Paint

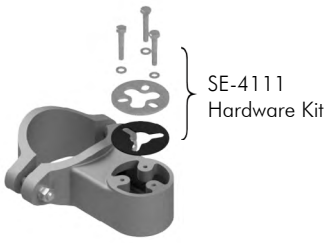

1-Way Tri-Bolt for 8" Signals, Alum for 2-7/8" to 3-1/2" OD Pole

SE-5054 - [ ] Coating

PNC=Process No Color
P_ _=Paint

Note: 1. All assemblies are supplied standard with stainless steel slotted washer and fasteners.
2. See Reference Section page v for available paint colors.

Aluminum Side-of-Pole

Pelco's Side-of-Pole assemblies are designed to mount traffic and pedestrian signals on the side of traffic signal poles with an upper and lower arm. Available in aluminum or iron, and 1-1/2" NPS, tri-bolt, or tri-stud, and a vast array of hubs to accommodate both 1-way or 2-way signal configurations.

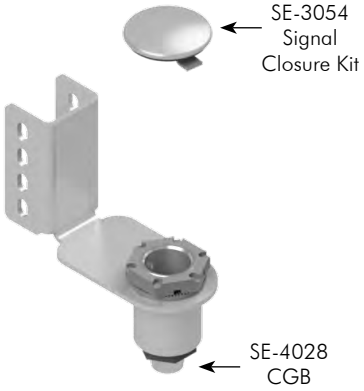

1-Way SOP Assy, 1-1/2" NPS, Alum for 2" Square Perforated Pole

SE-3345 - [ ]

Coating

PNC=Process No Color
P__=Paint

1-Way Hub Assy, 1-1/2" NPS, Alum for 4-1/2" OD Pole

SE-3093 - [ ]

Coating

PNC=Process No Color
P__=Paint

2-Way Hub Assy, 1-1/2" NPS, Alum for 4-1/2" OD Pole

SE-3094 - [ ]

Coating

PNC=Process No Color
P__=Paint

1-Way Hub Assy, 1-1/2" NPS, Alum for 2-7/8" to 3-1/2" OD Pole

SE-3216 - [ ]

Coating

PNC=Process No Color
P__=Paint

Note: 1. All assemblies are supplied standard with stainless steel slotted washer and fasteners.
2. See Reference Section page v for available paint colors.

Iron 1-Way Side-of-Pole with Cast Nipples

Pelco's Side-of-Pole assemblies are designed to mount traffic and pedestrian signals on the side of traffic signal poles with an upper and lower arm. Available in aluminum or iron, and 1-1/2" NPS, tri-bolt, or tri-stud, and a vast array of hubs to accommodate both 1-way or 2-way signal configurations.

1-Way Upper & Lower Arm Assy, Steel Nipples, Iron

SE-3167 - [Nipple Length] - [Coating]

Nipple Length:
06=6"
08=8"
10=10"
12=12"
14=14"

Coating:
P_ _=Paint

Note:
For available hub plates see Components page T14-17 through T14-20.

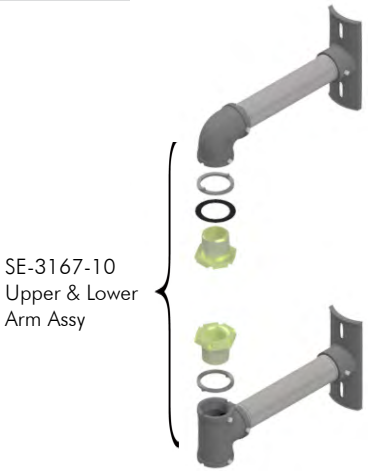

1-Way Upper & Lower Arm Assy, 10" Steel Nipples & Iron Hub

SE-3309 - [Coating]

Coating:
P_ _=Paint

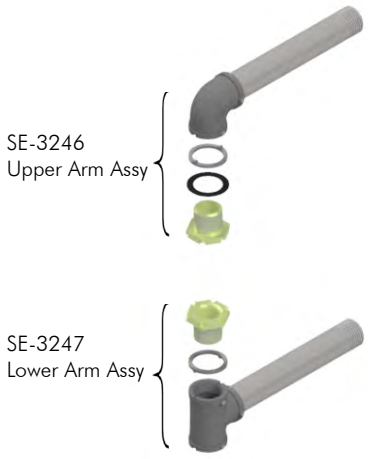

1-Way Upper & Lower ICC Ped Arm Assy, 12" Steel Nipples, Iron

SE-3248 - [Coating]

Coating:
P_ _=Paint

Note:
For available hub plates see Components page T14-17 through T14-20.

Note: 1. All assemblies are supplied standard with stainless steel fasteners.
2. See Reference Section v for available paint colors.

Iron 2-Way Side-of-Pole with Cast Nipples

Pelco's Side-of-Pole assemblies are designed to mount traffic and pedestrian signals on the side of traffic signal poles with an upper and lower arm. Available in aluminum or iron, and 1-1/2" NPS, tri-bolt, or tri-stud, and a vast array of hubs to accommodate both 1-way or 2-way signal configurations.

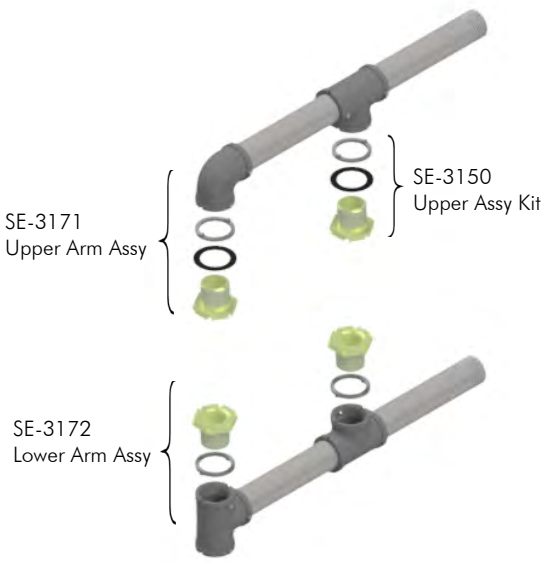

2-Way Upper & Lower Tandem Arm Assy, 10" Steel Nipples, Iron

SE-3173 - [ ]

Coating

PNC=Process No Color
P_ _=Paint

Note:
For available hub plates see Components page T14-17 through T14-20.

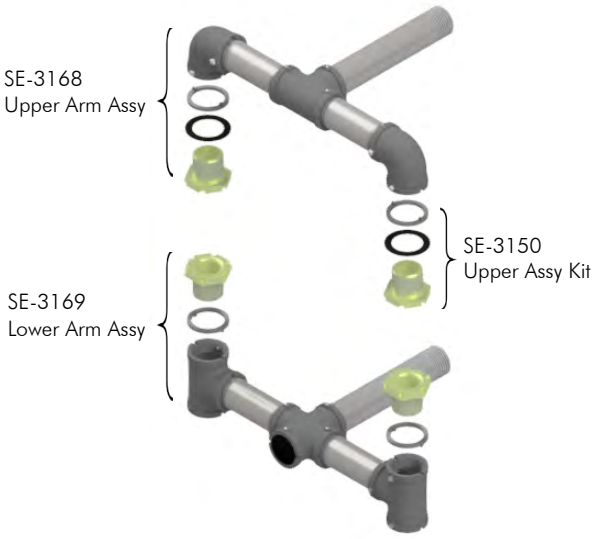

2-Way Upper & Lower Arm Assy, 16-1/2" CTC, Steel Nipples, Iron

SE-3170 - [ ]

Coating

PNC=Process No Color
P_ _=Paint

Note:
For available hub plates see Components page T14-17 through T14-20.

Note: 1. All assemblies are supplied standard with stainless steel fasteners.
2. See Reference Section v for available paint colors.

Terminal Compartments Aluminum

Pelco's aluminum Terminal Compartments are available with a flat back or curved to fit onto the side of a pole. In-line and flat back Terminal Compartments are supplied with a 12-ciruit terminal strip and an ABS plastic door.

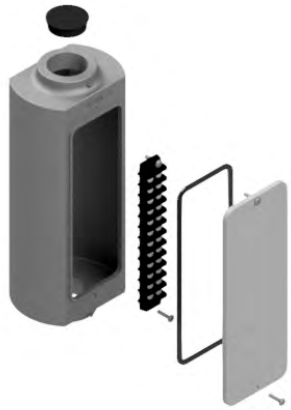

Terminal Compartment Assy, In-Line Flat Back, Top & Bottom Hubs, Alum

SE-3101 - [ ]

Coating

PNC=Process No Color
P_ _=Paint

Note:
Plastic door standard, aluminum door available.

Terminal Compartment Assy, 2-Way Flat Back, Alum

SE-3083 - [ ]

Coating

PNC=Process No Color
P_ _=Paint

Note:
Plastic door standard, aluminum door available.

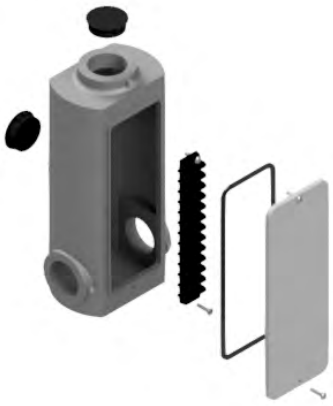

Terminal Compartment Assy, 2-Way Flat Back, Rear Hub, Alum

SE-3084 - [ ]

Coating

PNC=Process No Color
P_ _=Paint

Note:
Plastic door standard, aluminum door available.

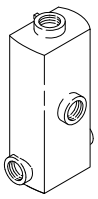

Rear View

Note: 1. All assemblies are supplied standard with stainless steel fasteners.
2. Terminal Compartments supplied standard with plastic door, aluminum door available.
3. See Reference Section v for available paint colors.

Terminal Compartments Aluminum

Pelco's aluminum Terminal Compartments are available with a flat back or curved to fit onto the side of a pole. Saddleback Terminal Compartments are supplied with a 12-ciruit terminal block and an ABS plastic door.

Terminal Compartment Assy, 2-Way Saddleback w/ Cable Entrance, Alum

SE-3081 - [ ] Coating

PNC=Process No Color
P__=Paint

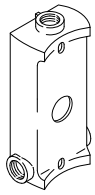

Rear View

Note:
Plastic door standard, aluminum door available.

Terminal Compartment Assy, 2-Way Saddleback w/ Cable Guide & Mounting Holes, Alum

SE-3078 - [ ] Coating

PNC=Process No Color
P__=Paint

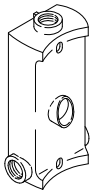

Rear View

Note:
Plastic door standard, aluminum door available.

Note: 1. All assemblies are supplied standard with stainless steel fasteners.
2. Terminal Compartments supplied standard with plastic door, aluminum door available.
3. See Reference Section v for available paint colors.

Terminal Compartments
Bronze & Iron

Pelco's bronze and iron Terminal Compartments are available with a curved back to fit onto the side of a pole. Saddleback Terminal Compartments are supplied with a 12-ciruit terminal block and an ABS plastic door.

Terminal Compartment Assy, 2-Way Saddleback w/ Cable Guide & Mounting Holes, Bronze

SE-4418 - [ ] Coating

PNC=Process No Color
P_ _=Paint

Note:
Plastic door standard, aluminum door available.

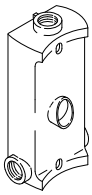

Rear View

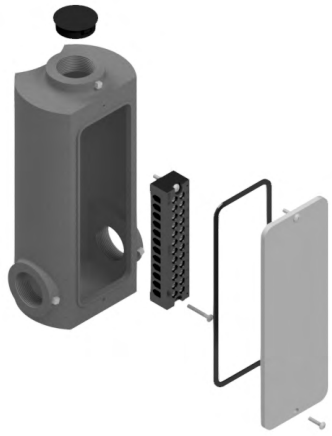

Terminal Compartment Assy, 2-Way Saddleback w/ Cable Guide & Mounting Holes, Iron

SE-3330 - [ ] Coating

GLV=Galvanized
P_ _=Paint

Note:
Plastic door standard, aluminum door available.

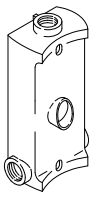

Rear View

Note: 1. All assemblies are supplied standard with stainless steel fasteners.
2. Terminal Compartments supplied standard with plastic door, aluminum door available.
3. See Reference Section v for available paint colors.

This page is intentionally left blank.

PELCO PRODUCTS, INC.

ISO 9001
www.intlcert.com

Aluminum Slip Fitter Assemblies, Cast Nipple

Pelco's Post Top Slip Fitters are available in aluminum, bronze, and iron, 1-1/2" NPS, Tri-Bolt or Tri-Stud. Post Top Terminal Compartments are also available in aluminum, bronze, and iron and are supplied with a 12-circuit terminal strip or block.

SE-3054
Signal Closure Kit

Post Top Assy, 1-Way Slip Fitter, Alum for 2-7/8" OD Pole Cast Nipple

SE-3279 - [ ] Coating

PNC=Process No Color
P_ _=Paint

SE-3003
Signal Mounting Kit

Post Top Assy, 1-Way Offset Slip Fitter, Alum for 4-1/2" OD Pole Cast Nipple

SE-3310 - [ ] Coating

PNC=Process No Color
P_ _=Paint

SE-3003
Signal Mounting Kit

Post Top Assy, 1-Way Slip Fitter, Alum for 4-1/2" OD Pole Cast Nipple

SE-3311 - [ ] Coating

PNC=Process No Color
P_ _=Paint

SE-3003
Signal Mounting Kit

Post Top Assy, 1-Way w/ 2-Way Slip Fitter, Alum for 4-1/2" OD Pole Cast Nipple

SE-3037 - [ ] Coating

PNC=Process No Color
P_ _=Paint

Note: 1. All assemblies supplied standard with stainless steel fasteners.
2. See Reference Section v for available paint colors.

Aluminum Slip Fitter Assemblies

Pelco's Post Top Slip Fitters are available in aluminum, bronze, and iron, 1-1/2" NPS, Tri-Bolt or Tri-Stud. Post Top Terminal Compartments are also available in aluminum, bronze, and iron and are supplied with a 12-circuit terminal strip or block. Designed to fit a 4-1/2" OD pole.

Post Top Assy, 1-Way, Alum for 4-1/2" OD Pole Tri-Bolt & Cast Nipple

SE-3012 - [Signal Section] - [Coating]

Signal Section: 1=1 Sec, 2=2 Sec, 3=3 Sec, 4=4 Sec, 5=5 Sec

Coating: PNC=Process No Color, P_ _=Paint

Post Top Assy, 2-Way Variable, Alum for 4-1/2" OD Pole Tri-Bolt & Cast Nipple

SE-3116 - [Signal Section] - [Coating]

Signal Section: 1=1 Sec, 2=2 Sec, 3=3 Sec, 4=4 Sec, 5=5 Sec

Coating: PNC=Process No Color, P_ _=Paint

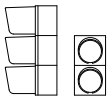

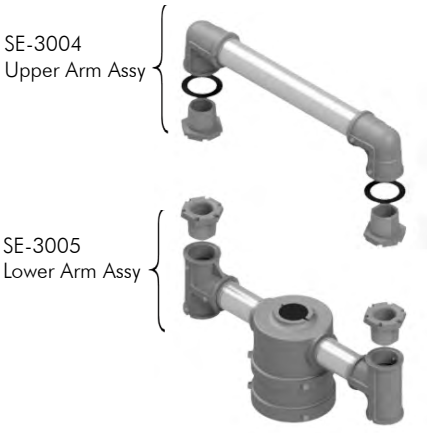

Slip Fitter Assy, 2-Way 16-1/2" CTC, Alum for 4-1/2" OD Pole Cast Nipple

SE-3089 - [Coating]

Coating: PNC=Process No Color, P_ _=Paint

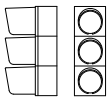

Note: 1. All assemblies are supplied standard with stainless steel slotted washer and fasteners.
2. See Reference Section v for available paint colors.

ISO 9001 www.intlcert.com

Aluminum Slip Fitter Assemblies, Cast Nipple

Pelco's Post Top Slip Fitters are available in aluminum, bronze, and iron, 1-1/2" NPS, Tri-Bolt or Tri-Stud. Post Top Terminal Compartments are also available in aluminum, bronze, and iron and are supplied with a 12-circuit terminal strip or block. Designed to fit a 4-1/2" OD pole.

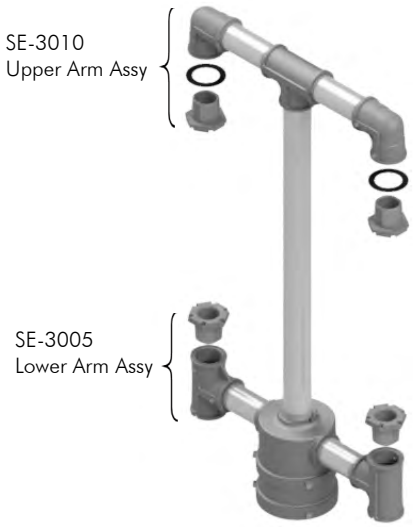

Post Top Assy, 2-Way 16-1/2" CTC, Alum for 4-1/2" OD Pole, Cast Nipple

SE-3053 - [Signal Section] - [Coating]

Signal Section:
1=1 Sec
2=2 Sec
3=3 Sec
4=4 Sec
5=5 Sec

Coating:
PNC=Process No Color
P_ _=Paint

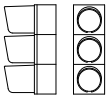

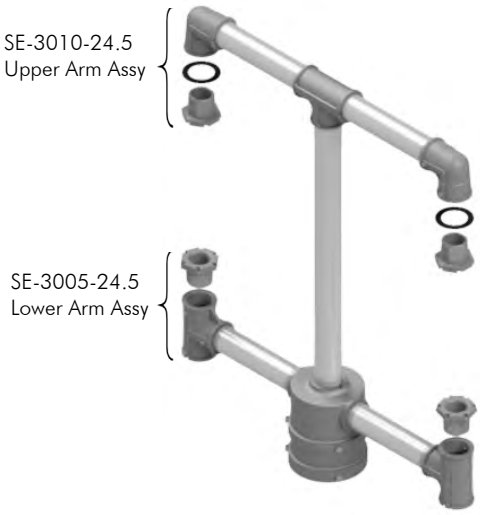

Post Top Assy, 2-Way ICC Ped 24-1/2" CTC, Alum for 4-1/2" OD Pole, Cast Nipple

SE-3257 - [Coating]

Coating:
PNC=Process No Color
P_ _=Paint

Note: 1. All assemblies are supplied standard with stainless steel slotted washer and fasteners.
2. See Reference Section v for available paint colors.

Aluminum Slip Fitter Assemblies, Tri-Stud

Pelco's Post Top Slip Fitters are available in aluminum, bronze, and iron, 1-1/2" NPS, Tri-Bolt or Tri-Stud. Post Top Terminal Compartments are also available in aluminum, bronze, and iron and are supplied with a 12-circuit terminal strip or block. Designed to fit a 4-1/2" OD pole.

Post Top Assy, 1-Way, Alum for 4-1/2" OD Pole Tri-Stud

SE-5016 - [ ] Coating

PNC=Process No Color
P_ _=Paint

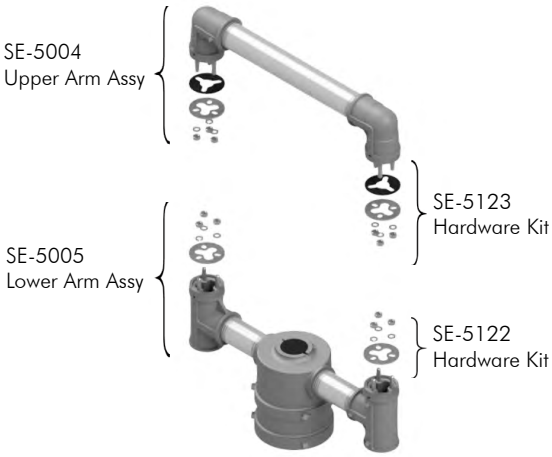

Post Top Assy, 2-Way 16-1/2" CTC, Alum for 4-1/2" OD Pole Tri-Stud

SE-5006 - [ ] Coating

PNC=Process No Color
P_ _=Paint

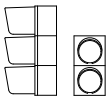

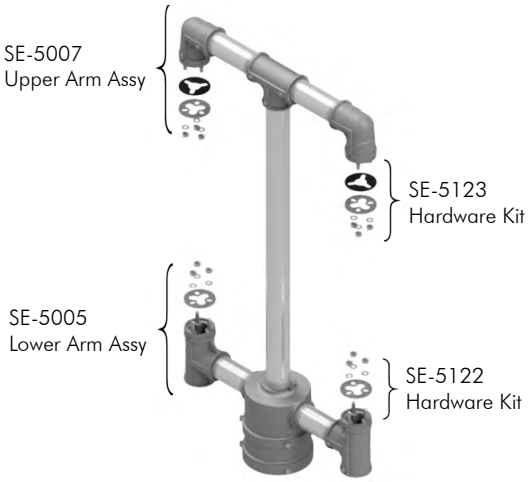

Post Top Assy, 2-Way 16-1/2" CTC, Alum for 4-1/2" OD Pole Tri-Stud

SE-5008 - [ ] Signal Section - [ ] Coating

1=1 Sec
2=2 Sec
3=3 Sec
4=4 Sec
5=5 Sec

PNC=Process No Color
P_ _=Paint

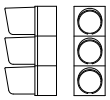

Note: 1. All assemblies are supplied standard with stainless steel slotted washer and fasteners.
2. See Reference Section v for available paint colors.

Iron Slip Fitter Assemblies, Cast Nipple

Pelco's Post Top Slip Fitters are available in aluminum, bronze, and iron, 1-1/2" NPS, Tri-Bolt or Tri-Stud. Post Top Terminal Compartments are also available in aluminum, bronze, and iron and are supplied with a 12-circuit terminal strip or block. Designed to fit a 4-1/2" OD pole.

Post Top Assy, 1-Way w/ 2-Way Slip Fitter, Iron for 4-1/2" OD Pole Cast Nipple

SE-3177 - [ ] Coating

P__=Paint

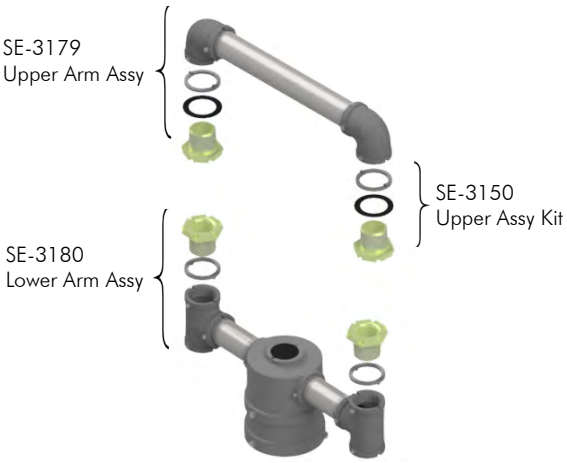

Post Top Assy, 2-Way 16-1/2" CTC, Iron for 4-1/2" OD Pole Cast Nipple

SE-3181 - [ ] Coating

P__=Paint

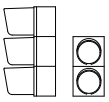

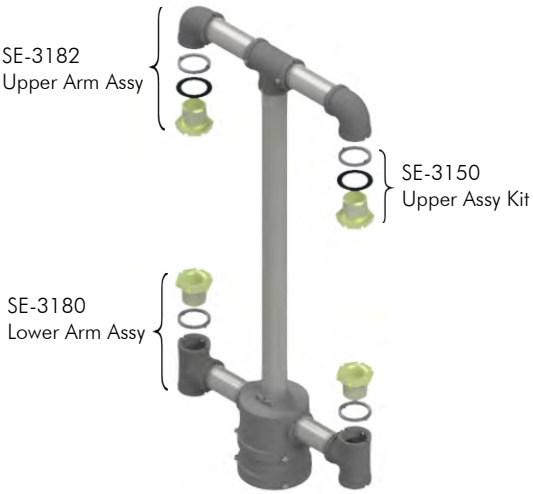

Post Top Assy, 2-Way 16-1/2" CTC, Iron for 4-1/2" OD Pole Cast Nipple

SE-3183 - [ ] Signal Section - [ ] Coating

1=1 Sec
2=2 Sec
3=3 Sec
4=4 Sec
5=5 Sec

P__=Paint

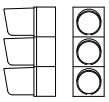

Note: 1. All assemblies are supplied standard with stainless steel fasteners.
2. See Reference Section v for available paint colors.

This page is intentionally left blank.

Slip Fitters, Alum

Pelco's aluminum Post Top Slip Fitters are available in a one-way, offset one-way, or a two, three, or four-way configuration. Designed to fit a 4-1/2" OD Pole.

Slip Fitter, 1-Way for 4-1/2" OD Pole, Alum

SE-3106 - [ ] Coating

PNC=Process No Color
P_ _=Paint

Slip Fitter, 1-Way Offset for 4-1/2" OD Pole, Alum

SE-3107 - [ ] Coating

PNC=Process No Color
P_ _=Paint

Slip Fitter, 1 & 2-Way for 4-1/2" OD Pole, Alum

SE-3002 - [ ] Coating

PNC=Process No Color
P_ _=Paint

Slip Fitter, 3 & 4-Way for 4-1/2" OD Pole, Alum

SE-3029 - [ ] Coating

PNC=Process No Color
P_ _=Paint

Note: 1. All assemblies are supplied standard with stainless steel fasteners.
2. See Reference Section v for available paint colors.

Slip Fitters, Iron

Pelco's iron Post Top Slip Fitters are available in a one, two, three, or four-way configuration. Designed to fit a 4-1/2" OD pole.

Slip Fitter, 1-Way for 4-1/2" OD Pole, Iron Serrated Top Port

SE-4431 - [ ] Coating

PNC=Process No Color
P_ _=Paint

Slip Fitter, 1 & 2-Way for 4-1/2" OD Pole, Iron

SE-3175 - [ ] Coating

P_ _=Paint

Slip Fitter, 3 & 4-Way for 4-1/2" OD Pole, Iron

SE-3176 - [ ] Coating

P_ _=Paint

Note: 1. All assemblies are supplied standard with stainless steel fasteners.
2. See Reference Section v for available paint colors.

ISO 9001 www.intlcert.com

Slip Fitters, Bronze

Bronze Post Top Slip Fitters are available in a one-way, offset one-way, or a two-way configuration. Pelco's bronze slip fitters are cast with top port serrations which eliminates the need for a lockring. Designed to fit a 4-1/2" OD pole

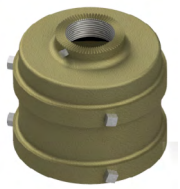

Slip Fitter, 1-Way for 4-1/2" OD Pole, Bronze Serrated Top Port

SE-4424 - [ ] Coating

PNC=Process No Color
P_ _=Paint

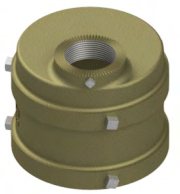

Slip Fitter, 1-Way Offset for 4-1/2" OD Pole, Bronze Serrated Top Port

SE-4425 - [ ] Coating

PNC=Process No Color
P_ _=Paint

Slip Fitter, 1 & 2-Way for 4-1/2" OD Pole, Bronze Serrated Top Port

SE-4423 - [ ] Coating

PNC=Process No Color
P_ _=Paint

Note: 1. All assemblies are supplied standard with stainless steel fasteners.
2. See Reference Section v for available paint colors.

Aluminum Terminal Compartment Assemblies

Pelco's Post Top Slip Fitters are available in aluminum, bronze, and iron, 1-1/2" NPS, Tri-Bolt or Tri-Stud. Post Top Terminal Compartments are available in aluminum or bronze and are supplied with a 12-circuit terminal strip or block. Designed to fit a 4-1/2" OD pole.

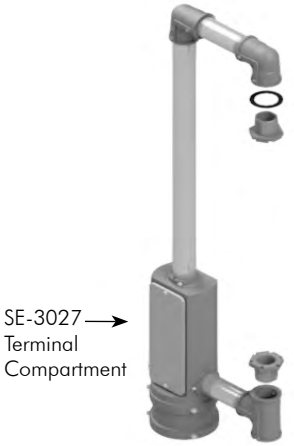

Terminal Compartment Assy, 1-Way, Alum for 4-1/2" OD Pole Cast Nipple

SE-3270 - [Signal Section] - [Coating]

Signal Section:
1=1 Sec
2=2 Sec
3=3 Sec
4=4 Sec
5=5 Sec

Coating:
PNC=Process No Color
P_ _=Paint

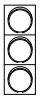

Terminal Compartment Assy, 1-Way ICC Ped, Alum for 4-1/2" OD Pole Cast Nipple

SE-3271 - [Coating]

PNC=Process No Color
P_ _=Paint

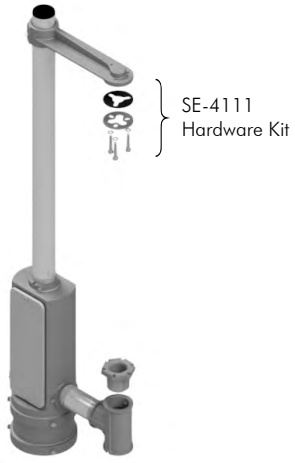

Terminal Compartment Assy, 1-Way, Alum for 4-1/2" OD Pole Tri-Bolt & Cast Nipple

SE-3013 - [Signal Section] - [Coating]

Signal Section:
1=1 Sec
2=2 Sec
3=3 Sec
4=4 Sec
5=5 Sec

Coating:
PNC=Process No Color
P_ _=Paint

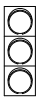

Note: 1. All assemblies are supplied standard with stainless steel slotted washer and fasteners.
2. Terminal Compartments supplied standard with plastic door, aluminum door available.
3. See Reference Section v for available paint colors.

ISO 9001 www.intlcert.com

Aluminum Terminal Compartment Assemblies

Pelco's Post Top Slip Fitters are available in aluminum, bronze, and iron, 1-1/2" NPS, Tri-Bolt or Tri-Stud. Post Top Terminal Compartments are available in aluminum or bronze and are supplied with a 12-circuit terminal strip or block. Designed to fit a 4-1/2" OD pole.

SE-3010
Upper Arm Assy

SE-3011
Lower Arm Assy

Terminal Compartment Assy, 2-Way, Alum
21" CTC for 4-1/2" OD Pole
Cast Nipple

SE-3048 - [Signal Section] - [Coating]

Signal Section:
1=1 Sec
2=2 Sec
3=3 Sec
4=4 Sec
5=5 Sec

Coating:
PNC=Process No Color
P_ _=Paint

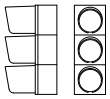

SE-5007
Upper Arm Assy

SE-5122
Hardware Kit

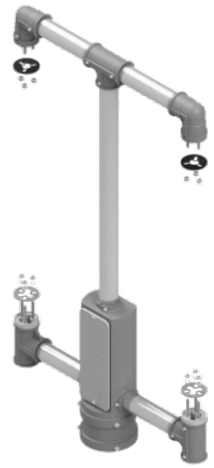

Terminal Compartment Assy, 2-Way, Alum
21" CTC for 4-1/2" OD Pole
Tri-Stud

SE-5187 - [Signal Section] - [Coating]

Signal Section:
1=1 Sec
2=2 Sec
3=3 Sec
4=4 Sec
5=5 Sec

Coating:
PNC=Process No Color
P_ _=Paint

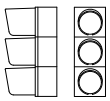

SE-3004
Upper Arm Assy

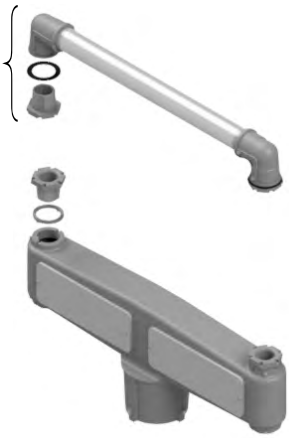

Terminal Compartment Assy, 2-Way, Alum
24" CTC for 4-1/2" OD Pole
Cast Nipple

SE-3141 - [Coating]

Coating:
PNC=Process No Color
P_ _=Paint

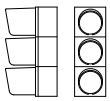

Note: 1. All assemblies are supplied standard with stainless steel slotted washer and fasteners.
2. Terminal Compartments supplied standard with plastic door, aluminum door available.
3. See Reference Section v for available paint colors.

Terminal Compartments Aluminum

Pelco's aluminum Post Top Terminal Compartments are available in a 2-way or 3-way configuration. Each are supplied standard with a 12-circuit terminal strip and an ABS plastic door. Designed to fit a 4-1/2" OD pole.

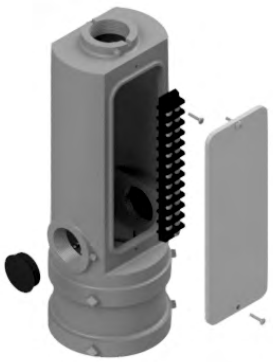

Terminal Compartment Assy, Vertical, Alum 2-Way Post Top for 4-1/2" OD Pole

SE-3027 - [ ] Coating

PNC=Process No Color
P_ _=Paint

Note:
Plastic door standard, aluminum door available.

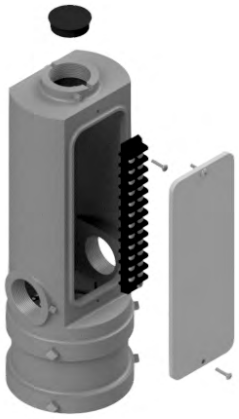

Terminal Compartment Assy, Vertical, Alum 3-Way Post Top for 4-1/2" OD Pole

SE-3074 - [ ] Coating

PNC=Process No Color
P_ _=Paint

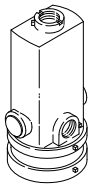

Rear Port

Note:
Plastic door standard, aluminum door available.

Note: 1. All assemblies are supplied standard with stainless steel fasteners.
2. Terminal Compartments supplied standard with plastic door, aluminum door available.
3. See Reference Section v for available paint colors.

Terminal Compartments Aluminum

Pelco's 2-way Horizontal Terminal Compartments are cast aluminum supplied with ABS plastic doors. Each can be configured with either a top port or a rear port and are supplied with one or two 12-circuit terminal strips. Designed to fit a 4-1/2" OD pole.

Terminal Compartment Assy, Horizontal, Alum 2-Way Post Top for 4-1/2" OD Pole

		Port Mountings		Terminal Strip		Coating
SE-3143	-	☐	-	☐	-	☐
		TP=Top Port RP=Rear Port		1T=Terminal Strip (1) 2T=Terminal Strips (2)		PNC=Process No Color P_ _=Paint

Note:
Plastic door standard, aluminum door available.

SE-3042
Upper Assy Kit

Terminal Compartment Assy, Horizontal, Alum 2-Way Post Top for 4-1/2" OD Pole Cast Nipples

		Port Mountings		Terminal Strip		Coating
SE-3135	-	☐	-	☐	-	☐
		TP=Top Port RP=Rear Port		1T=Terminal Strip (1) 2T=Terminal Strips (2)		PNC=Process No Color P_ _=Paint

Note:
Plastic door standard, aluminum door available.

Note: 1. All assemblies are supplied standard with stainless steel fasteners.
2. Terminal Compartments supplied standard with plastic door, aluminum door available.
3. See Reference Section v for available paint colors.

Terminal Compartments
Bronze & Iron

Pelco's bronze and iron Post Top Terminal Compartments are available in a 2-way configuration. Each are supplied standard with a 12-circuit terminal block and an ABS plastic door. Designed to fit a 4-1/2" OD pole.

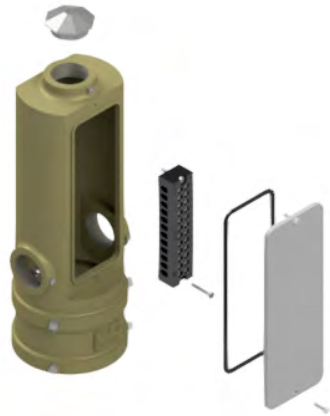

Terminal Compartment Assy, Vertical 2-Way Post Top for 4-1/2" OD Pole, Bronze

SE-4422 - [ ] Coating

PNC=Process No Color
P_ _=Paint

Note:
Plastic door standard, aluminum door available.

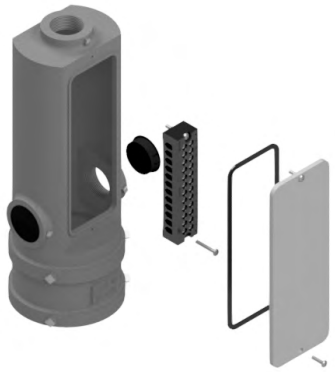

Terminal Compartment Assy, Vertical 2-Way Post Top for 4-1/2" OD Pole, Iron

SE-3331 - [ ] Coating

GLV=Galvanized
P_ _=Paint

Note:
Plastic door standard, aluminum door available.

Note: 1. All assemblies are supplied standard with stainless steel fasteners.
2. Terminal Compartments supplied standard with plastic door, aluminum door available.
3. See Reference Section v for available paint colors.

Plumbizers
Aluminum

Pelco's aluminum Plumbizers, available in both straight and offset configuations, are designed to mount traffic signal assemblies to the end of a mast arm. Provided with hardware for mounting onto a 2-3/8" diameter tenon.

Straight Plumbizer Assy, Alum w/ Hardware

SE-0352 - [ ] Coating

PNC=Process No Color
P_ _=Paint

Offset Plumbizer Assy, Alum w/ Hardware

SE-0353 - [ ] Coating

PNC=Process No Color
P_ _=Paint

Note: 1. All assemblies are supplied standard with stainless steel fasteners.
2. See Reference Section page v for available paint colors.

Plumbizers
Bronze & Iron

Pelco's bronze and iron offset Plumbizers are designed to mount traffic signal assemblies on the end of a mast arm. Provided with hardware for mounting onto a 2-3/8" diameter tenon.

Offset Plumbizer Assy, Bronze w/ Hardware

SE-4413 - [ ] Coating

PNC=Process No Color
P_ _=Paint

Offset Plumbizer Assy, Iron Large Hole w/ Hardware

SE-3335 - [ ] Coating

P_ _=Paint

Straight Plumbizer Assy, Copper Alloy w/ Hardware

SE-0352-B - [ ] Coating

P_ _=Paint

Plumbizer Hardware Kit, 5/16"-18 x 3-1/2" Carriage Bolts Stainless slotted Washer & Hardware

SE-3282-SS

Note: 1. All assemblies are supplied standard with stainless steel fasteners.
3. See Reference Section page v for available paint colors.

Mast Arm Hangers Aluminum

Pelco's aluminum Mast Arm Hangers are designed to mount traffic signal assemblies on the end of a mast arm. Available in both 1-1/2" and tri-stud. Provided with hardware for mounting to a 2-3/8" diameter tenon.

Rigid Mast Arm Hanger, Alum 1-1/2" NPS w/ Hardware

SE-0350 - [Double Set Screws] - [Coating]

Double Set Screws: Blank=None, DS=Double Set Screws

Coating: PNC=Process No Color, P_ _=Paint

Rigid Mast Arm Hanger, Alum Cast Nipple

SE-3056 - [Coating]

Coating: PNC=Process No Color, P_ _=Paint

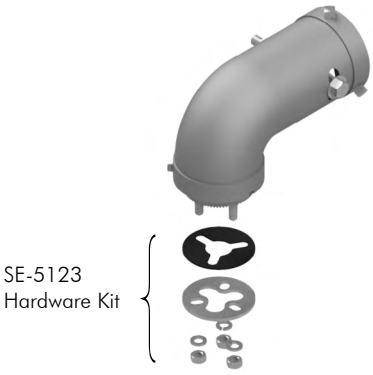

Rigid Mast Arm Hanger, Alum Tri-Stud

SE-3119 - [Coating]

Coating: PNC=Process No Color, P_ _=Paint

Note: 1. All assemblies are supplied standard with stainless steel fasteners.
2. See Reference Section page v for available paint colors.

Mast Arm Hangers
Aluminum

Pelco's aluminum Mast Arm Hanger are for mounting traffic signal assemblies on the end of a mast arm. Free-swinging styles are available with a cast nipple or all thread. Provided with hardware for mounting to a 2-3/8" diameter tenon.

Free-Swinging Mast Arm Hanger, Alum 1-1/2" NPS w/ Hardware

	Insulator Bushing		Stainless Bushing		Coating
SE-3103 -	☐	-	☐	-	☐
	Blank=None IB=Insulator Bushing		Blank=None SB=Stainless		PNC=Process No Color P_ _=Paint

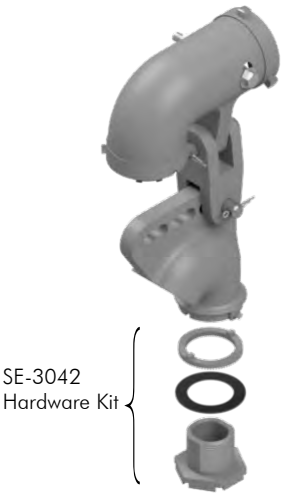

Free-Swinging Mast Arm Hanger Assy, Alum w/ Outlet Body & Cast Nipple

	Stainless Bushing		Stainless Upgrade		Coating
SE-3201 -	☐	-	☐	-	☐
	Blank=None SB=Stainless Bushing		Blank=None SB=Stainless		PNC=Process No Color P_ _=Paint

Free-Swinging Mast Arm Hanger Assy, Alum w/ Outlet Body & All Thread Nipple

	Stainless Bushing		Stainless Upgrade		Coating
SE-3314 -	☐	-	☐	-	☐
	Blank=None SB=Stainless Bushing		Blank=None SB=Stainless		PNC=Process No Color P_ _=Paint

Note: 1. All assemblies are supplied standard with stainless steel slotted washers and fasteners, with galvanized hardware on outlet body. Stainless upgrade shall include stainless steel hardware and pins.
3. See Reference Section page v for available paint colors.

ISO 9001 www.intlcert.com

Mast Arm Hangers
Aluminum

Pelco's aluminum Mast Arm Hanger are for mounting traffic signal assemblies on the end of a mast arm. Free-swinging styles are available with a cast nipple or all thread. Provided with hardware for mounting to a 2-3/8" diameter tenon.

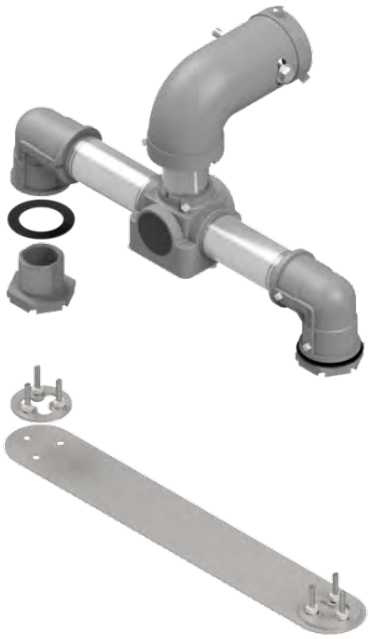

Rigid Mast Arm Hanger, 2-Way, Alum
1-1/2" NPS Upper & Tri-Stud Lower

		Set Screw		Coating
SE-3346	-	☐	-	☐
		Blank=Single Set Screw DS=Double Set Screw		PNC=Process No Color P_ _=Paint

Note: 1. All assemblies are supplied standard with stainless steel fasteners.
2. See Reference Section page v for available paint colors.

PELCO PRODUCTS, INC.
ISO 9001 www.intlcert.com

Mast Arm Ell Hangers
Bronze & Iron

Pelco's bronze and iron Ell Hangers, for mounting traffic signal assemblies on the end of a mast arm, are designed with serrations for locking onto the top of a signal. Provided with hardware for mounting to a 2-3/8" diameter tenon.

Ell Assy, Rigid Tenon Mount, Bronze
1-1/2" NPS w/ Serrations & Hardware

SE-4412 - [ ] Coating

PNC=Process No Color
P_ _=Paint

Ell Assy, Rigid Tenon Mount, Iron
1-1/2" NPS w/ Serrations & Hardware

SE-4439 - [ ] Coating

P_ _=Paint

Note: 1. All assemblies are supplied standard with stainless steel fasteners.
2. See Reference Section page v for available paint colors.

Astro Sign-Brac Overhead Street Name Signs Cable Mount

Pelco manufactures a variety of sign brackets in rigid and free-swinging mounts for both flat and internally illuminated signs. Most sign-bracs are available with a cable, band, or tenon mount clamp kit.

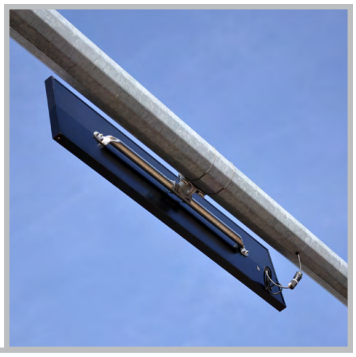

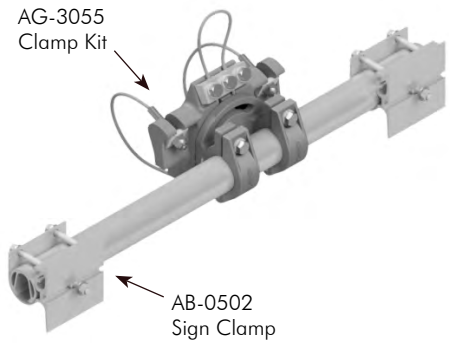

Astro Sign-Brac, Galaxy Cable Mount for Overhead Street Name Signs

AG-0144 - [CTC] - [Cable Length] - [Cable] - [Coating]

CTC	Cable Length	Cable	Coating
See Sign Clamp Tables	See Table	Blank=Galv SS=Stainless	PNC=Process No Color P__=Paint

Cable Length:	62″	84″	96″	110″	120″	132″	144″	220″	280″
Maximum Pole Dia:	7.0″	10.5″	12.4″	14.6″	16.2″	18.2″	20.1″	32.2″	35.0″
Pole Dia w/ Ty-back:	4.5″	7.6″	9.6″	11.8″	13.4″	15.3″	17.2″	29.3″	35.0″

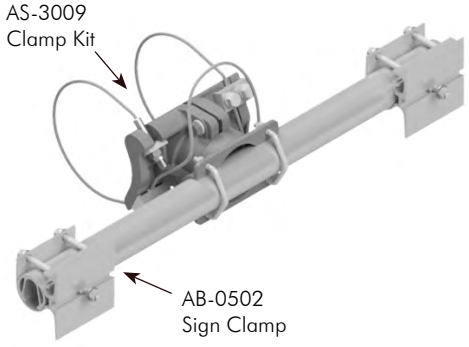

Astro Sign-Brac, Stellar Cable Mount for Overhead Street Name Signs

AS-0144 - [CTC] - [Cable Length] - [Cable] - [Coating]

CTC	Cable Length	Cable	Coating
See Sign Clamp Tables	See Table	Blank=Galv SS=Stainless	PNC=Process No Color P__=Paint

Cable Length:	62″	84″	96″	110″	120″	132″	144″	220″	280″
Maximum Pole Dia:	7.0″	10.5″	12.4″	14.6″	16.2″	18.2″	20.1″	32.2″	35.0″
Pole Dia w/ Ty-back:	4.5″	7.6″	9.6″	11.8″	13.4″	15.3″	17.2″	29.3″	35.0″

2 Sign Clamps				
Sign:	18”	24”	30”	36”
Max CTC:	12”	18”	24”	30”

4 Sign Clamps										
Sign:	42”	48”	54”	60”	66”	72”	78”	84”	90”	96”
Max CTC:	36”	42”	48”	54”	60”	66”	72”	78”	84”	90”

6 Sign Clamps			
Sign:	102”	108”	114”
Max CTC:	96”	102”	108”

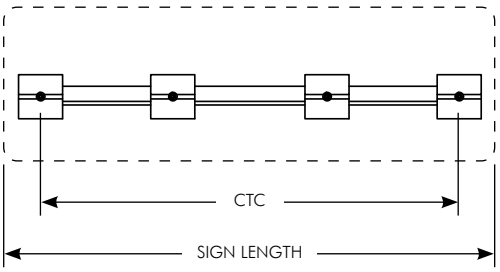

Notes:

130 mph wind zone maximum: 16 sq-ft
150 mph wind zone maximum: 12 sq-ft

1. Capacities listed are only for applications with the clamp kit mounted in the center of the sign.
2. Signs must be properly engineered for specific application.
3. Tube length is 4″ longer than maximum CTC.

Note: 1. All assemblies are supplied standard with stainless fasteners.
2. See Reference Section page v for available paint colors.

Astro Sign-Brac
Overhead Street Name Signs
Band and Tenon Mount

Pelco manufactures a variety of sign brackets in rigid and free-swinging mounts for both flat and internally illuminated signs. Most sign-bracs are available with a cable, band, or tenon mount clamp kit.

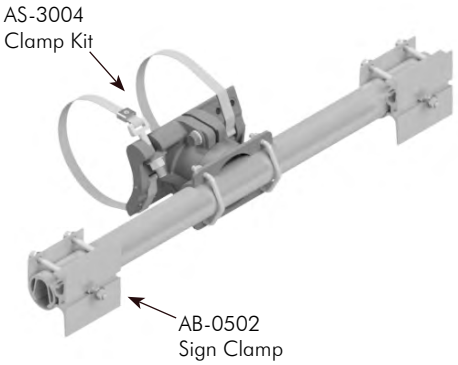

Astro Sign-Brac, Stellar Band Mount for Overhead Street Name Signs

AS-0128 - [CTC] - [Band Length] - [Coating]

- CTC: See Sign Clamp Tables
- Band Length: See Table
- Coating: PNC=Process No Color, P_ _=Paint

Band Length:	29″	42″	56″	72″	114″
Maximum Pole Dia:	7.3″	11.5″	15.9″	21.0″	34.4″

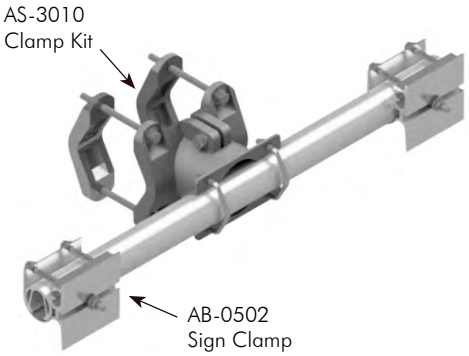

Astro Sign-Brac, Stellar Tenon Mount for Overhead Street Name Signs

AS-0662 - [CTC] - [Coating]

- CTC: See Sign Clamp Tables
- Coating: PNC=Process No Color, P_ _=Paint

Note:
Fits 1.9″ to 4.5″ diameter.

2 Sign Clamps				
Sign:	18”	24”	30”	36”
Max CTC:	12”	18”	24”	30”

4 Sign Clamps										
Sign:	42”	48”	54”	60”	66”	72”	78”	84”	90”	96”
Max CTC:	36”	42”	48”	54”	60”	66”	72”	78”	84”	90”

6 Sign Clamps			
Sign:	102”	108”	114”
Max CTC:	96”	102”	108”

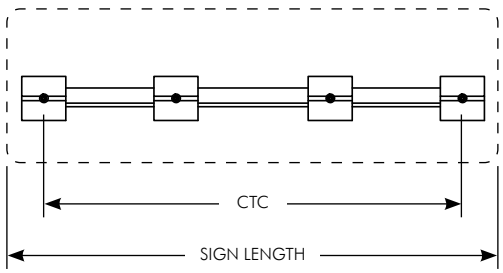

Notes:

130 mph wind zone maximum: 16 sq-ft
150 mph wind zone maximum: 12 sq-ft

1. Capacities listed are only for applications with the clamp kit mounted in the center of the sign.
2. Signs must be properly engineered for specific application.
3. Tube length is 4″ longer than maximum CTC.

Note: 1. All assemblies are supplied standard with stainless fasteners.
2. See Reference Section page v for available paint colors.

Astro Sign-Brac
Overhead Street Name Signs
Atlas Articulating Mount

Pelco manufactures a variety of sign brackets in rigid and free-swinging mounts for both flat and internally illuminated signs. Most sign-bracs are available with a cable, band, or tenon mount clamp kit.

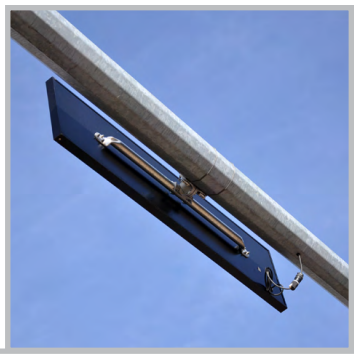

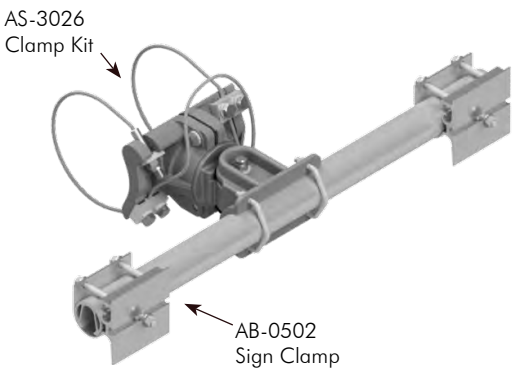

Astro Sign-Brac, Atlas Articulating Cable Mount for Overhead Street Name Signs

AS-0185 - [CTC] - [Cable Length] - [Cable] - [Coating]

- CTC: See Sign Clamp Tables
- Cable Length: See Table
- Cable: Blank=Galv, SS=Stainless
- Coating: PNC=Process No Color, P__=Paint

Cable Length:	62″	84″	96″	110″	120″	132″	144″	220″	280″
Maximum Pole Dia:	7.0″	10.5″	12.4″	14.6″	16.2″	18.2″	20.1″	32.2″	35.0″
Pole Dia w/ Ty-back:	4.5″	7.6″	9.6″	11.8″	13.4″	15.3″	17.2″	29.3″	35.0″

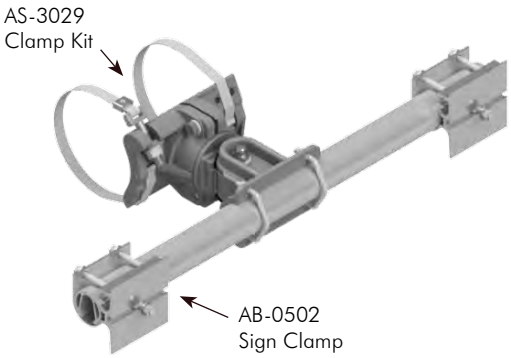

Astro Sign-Brac, Atlas Articulating Band Mount for Overhead Street Name Signs

AS-0176 - [CTC] - [Band Length] - [Coating]

- CTC: See Sign Clamp Tables
- Band Length: See Table
- Coating: PNC=Process No Color, P__=Paint

Band Length:	29″	42″	56″	72″	114″
Maximum Pole Dia:	7.3″	11.5″	15.9″	21.0″	34.4″

2 Sign Clamps				
Sign:	18”	24”	30”	36”
Max CTC:	12”	18”	24”	30”

4 Sign Clamps										
Sign:	42”	48”	54”	60”	66”	72”	78”	84”	90”	96”
Max CTC:	36”	42”	48”	54”	60”	66”	72”	78”	84”	90”

6 Sign Clamps			
Sign:	102”	108”	114”
Max CTC:	96”	102”	108”

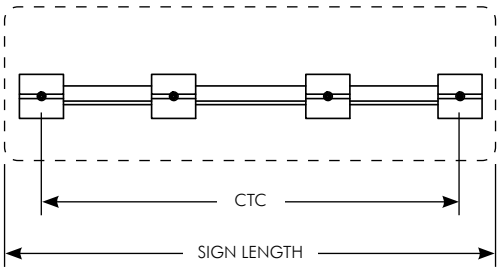

Notes:

130 mph wind zone maximum: 16 sq-ft
150 mph wind zone maximum: 12 sq-ft

1. Capacities listed are only for applications with the clamp kit mounted in the center of the sign.
2. Signs must be properly engineered for specific application.
3. Tube length is 4″ longer than maximum CTC.

Note: 1. All assemblies are supplied standard with stainless fasteners.
2. See Reference Section page v for available paint colors.

Astro Sign-Brac Overhead Street Name Signs w/ Signal Mount

Pelco manufactures a variety of sign brackets in rigid and free-swinging mounts for both flat and internally illuminated signs. Most sign-bracs are available with a cable, band, or tenon mount clamp kit.

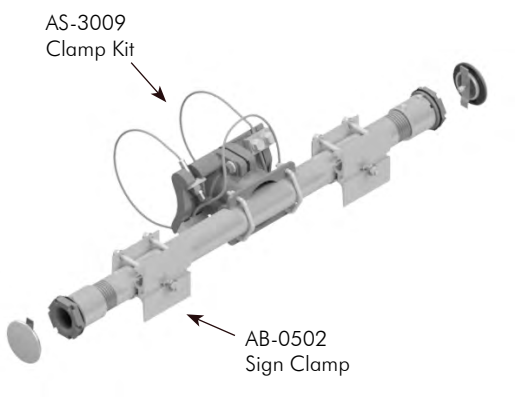

Astro-Brac Assy, Stellar Cable Mount for Sign w/ Signals

AS-0196 - [CTC] - [Cable Length] - [Cable] - [Coating]

- CTC: See Sign CTC Table
- Cable Length: See Table
- Cable: Blank=Galv, SS=Stainless
- Coating: PNC=Process No Color, P_ _=Paint

Cable Length:	62″	84″	96″	110″	120″	132″	144″	220″	280″
Maximum Pole Dia:	7.0″	10.5″	12.4″	14.6″	16.2″	18.2″	20.1″	32.2″	35.0″
Pole Dia w/ Ty-back:	4.5″	7.6″	9.6″	11.8″	13.4″	15.3″	17.2″	29.3″	35.0″

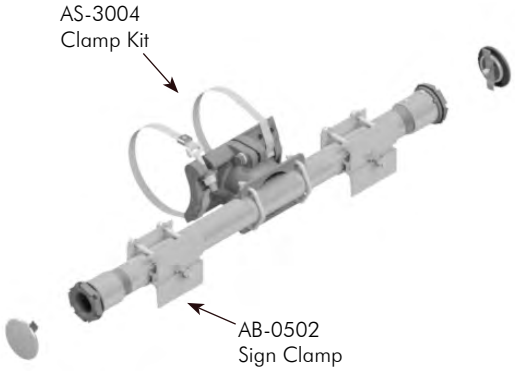

Astro-Brac Assy, Stellar Band Mount for Sign w/ Signals

AS-0195 - [CTC] - [Band Length] - [Coating]

- CTC: See Sign CTC Table
- Band Length: See Table
- Coating: PNC=Process No Color, P_ _=Paint

Band Length:	29″	42″	56″	72″	114″
Maximum Pole Dia:	7.3″	11.5″	15.9″	21.0″	34.4″

Sign CTC							
Max CTC:	24”	30”	36”	42”	48”	54”	60”
Tube Length:	46”	52”	58”	64”	70”	76”	82”

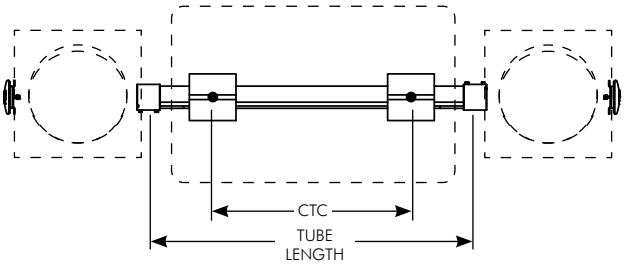

Notes:

130 mph wind zone maximum: 16 sq-ft
150 mph wind zone maximum: 12 sq-ft

1. Capacities listed are only for applications with the clamp kit mounted in the center of the sign.
2. Signs must be properly engineered for specific application.
3. Tube length is 4″ longer than maximum CTC.

Note: 1. All assemblies are supplied standard with stainless fasteners.
2. See Reference Section page v for available paint colors.

ISO 9001 www.intlcert.com

Astro Sign-Brac
Overhead Street Name Signs
2-Way Back-to-Back

Pelco manufactures a variety of sign brackets in rigid and free-swinging mounts for both flat and internally illuminated signs. Most sign-bracs are available with a cable, band, or tenon mount clamp kit.

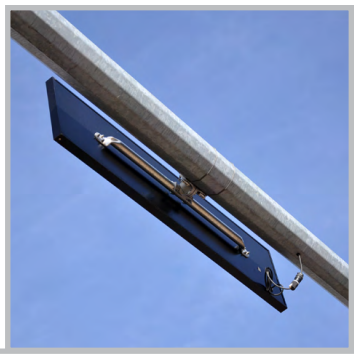

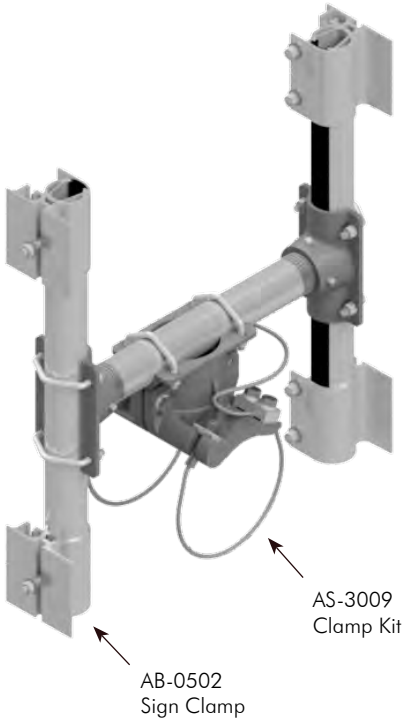

Astro-Brac Assy, Stellar Cable Mount for 2-Way Back-to-Back Signs

AS-0701 - [CTC] - [Tube Length] - [Cable Length] - [Cable] - [Coating]

CTC	Tube Length	Cable Length	Cable	Coating
See Sign CTC Table	12=12″ Tube 14=14″ Tube 16=14″ Tube	See Table	Blank=Galv SS=Stainless	PNC=Process No Color P_ _=Paint

Cable Length:	62″	84″	96″	110″	120″	132″	144″	220″	280″
Maximum Pole Dia:	7.0″	10.5″	12.4″	14.6″	16.2″	18.2″	20.1″	32.2″	35.0″
Pole Dia w/ Ty-back:	4.5″	7.6″	9.6″	11.8″	13.4″	15.3″	17.2″	29.3″	35.0″

Sign CTC				
Sign:	18”	24”	30”	36”
Max CTC:	12”	18”	24”	30”

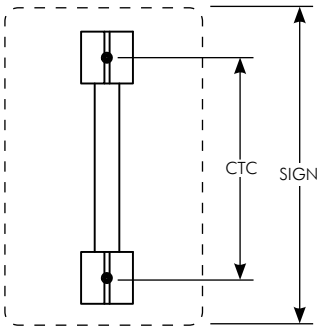

Notes:

1. Maximum sign size 9 sq ft.
2. Signs must be properly engineered for specific application.
3. Tube length is 4″ longer than maximum CTC.

Note: 1. All assemblies are supplied standard with stainless fasteners.
2. See Reference Section page v for available paint colors.

This page is intentionally left blank.

PELCO PRODUCTS, INC.

ISO 9001
www.intlcert.com

Astro Sign-Brac Formed Tubes Cable Mount

Pelco manufactures a variety of sign brackets in rigid and free-swinging mounts for both flat and internally illuminated signs. Most sign-bracs are available with a cable, band, or tenon mount clamp kit.

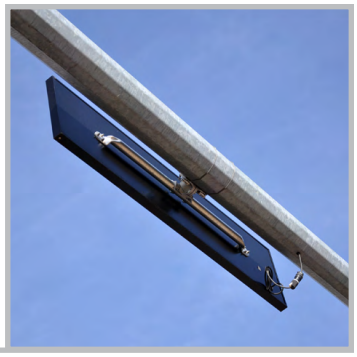

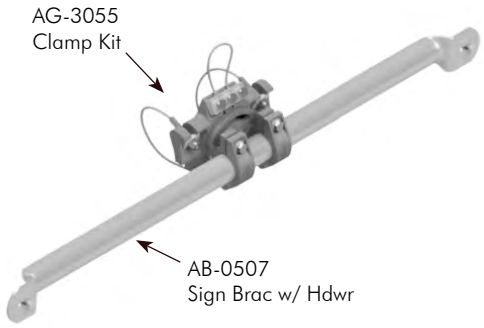

Astro Sign-Brac, Galaxy Cable Mount, Formed Tube

	CTC	Cable Length	Cable	Coating
AG-0142 -	[ ] -	[ ] -	[ ] -	[ ]
	See Sign CTC Table	See Table	Blank=Galv SS=Stainless	PNC=Process No Color P_ _=Paint

Cable Length:	62″	84″	96″	110″	120″	132″	144″	220″	280″
Maximum Pole Dia:	7.0″	10.5″	12.4″	14.6″	16.2″	18.2″	20.1″	32.2″	35.0″
Pole Dia w/ Ty-back:	4.5″	7.6″	9.6″	11.8″	13.4″	15.3″	17.2″	29.3″	35.0″

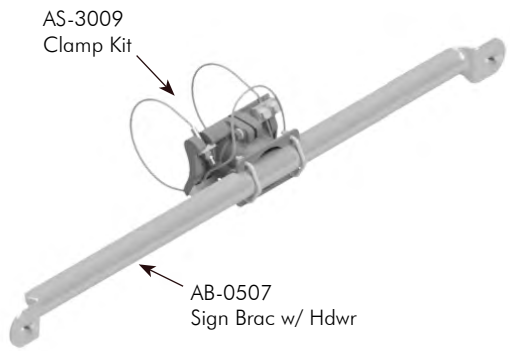

Astro Sign-Brac, Stellar Cable Mount, Formed Tube

	CTC	Cable Length	Cable	Coating
AS-0142 -	[ ] -	[ ] -	[ ] -	[ ]
	See Sign CTC Table	See Table	Blank=Galv SS=Stainless	PNC=Process No Color P_ _=Paint

Cable Length:	62″	84″	96″	110″	120″	132″	144″	220″	280″
Maximum Pole Dia:	7.0″	10.5″	12.4″	14.6″	16.2″	18.2″	20.1″	32.2″	35.0″
Pole Dia w/ Ty-back:	4.5″	7.6″	9.6″	11.8″	13.4″	15.3″	17.2″	29.3″	35.0″

Sign CTC									
Max CTC:	9”	12”	15”	18”	24”	30”	36”	42”	48”	60”
Sign Length:	15”	18”	21”	24”	30”	36”	42”	48”	54”	66”

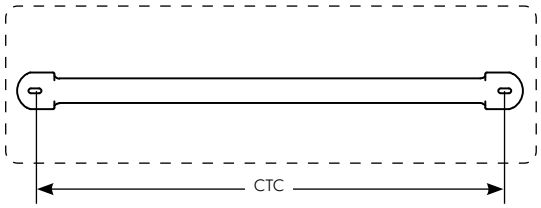

Notes:

90 mph wind zone maximum: 16 sq-ft

1. Capacity listed is only for applications with the clamp kit mounted in the center of the sign.
2. Signs must be properly engineered for specific application.
3. For higher wind zones and multiple brackets use assemblies shown on T6-1 & T6-2.

Note: 1. All assemblies are supplied standard with stainless fasteners.
2. See Reference Section page v for available paint colors.

Astro Sign-Brac Formed Tubes Band & Tenon Mount

Pelco manufactures a variety of sign brackets in rigid and free-swinging mounts for both flat and internally illuminated signs. Most sign-bracs are available with a cable, band, or tenon mount clamp kit.

AS-3004
Clamp Kit

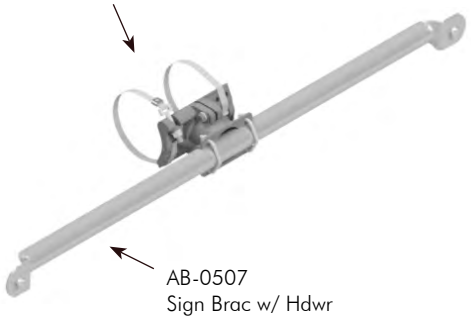

AB-0507
Sign Brac w/ Hdwr

Astro Sign-Brac, Stellar Band Mount, Formed Tube

AS-0105 - [CTC] - [Band Length] - [Coating]

CTC: See Sign CTC Table
Band Length: See Table
Coating: PNC=Process No Color, P__=Paint

Band Length:	29″	42″	56″	72″	114″
Maximum Pole Dia:	7.3″	11.5″	15.9″	21.0″	34.4″

AS-3010
Clamp Kit

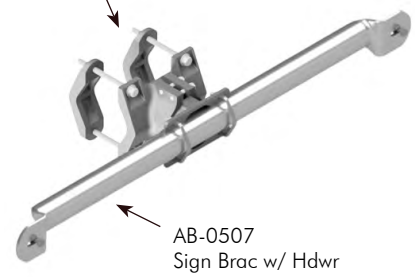

AB-0507
Sign Brac w/ Hdwr

Astro Sign-Brac, Stellar Tenon Mount, Formed Tube

AS-0179 - [CTC] - [Coating]

CTC: See Sign CTC Table
Coating: PNC=Process No Color, P__=Paint

Note:
Fits 1.9″ to 4.5″ diameter.

Sign CTC										
Max CTC:	9”	12”	15”	18”	24”	30”	36”	42”	48”	60”
Sign Length:	15”	18”	21”	24”	30”	36”	42”	48”	54”	66”

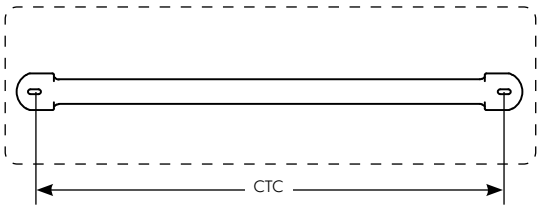

Notes:

90 mph wind zone maximum: 16 sq-ft

1. Capacity listed is only for applications with the clamp kit mounted in the center of the sign.
2. For higher wind zones and multiple brackets use assemblies shown on T6-1 & T6-2.
3. Signs must be properly engineered for specific application.

Note: 1. All assemblies are supplied standard with stainless fasteners.
2. See Reference Section page v for available paint colors.

PELCO PRODUCTS, INC.

ISO 9001
www.intlcert.com

Astro Sign-Brac Formed Tubes Atlas Articulated Mounts

Pelco manufactures a variety of sign brackets in rigid and free-swinging mounts for both flat and internally illuminated signs. Most sign-bracs are available with a cable, band, or tenon mount clamp kit.

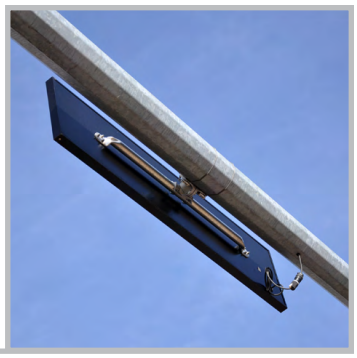

AS-3026
Clamp Kit

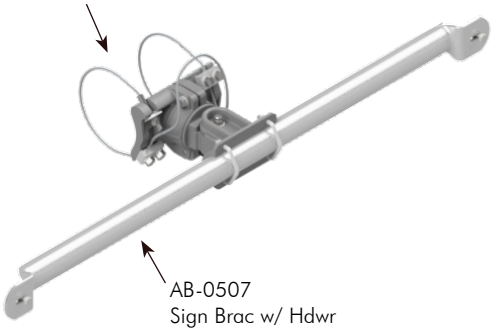

AB-0507
Sign Brac w/ Hdwr

Astro Sign-Brac, Atlas Articulating Cable Mount, Formed Tube

		CTC		Cable Length		Cable		Coating
AS-0136	-		-		-		-	
		See Sign CTC Table		See Table		Blank=Galv SS=Stainless		PNC=Process No Color P_ _=Paint

Cable Length:	62″	84″	96″	110″	120″	132″	144″	220″	280″
Maximum Pole Dia:	7.0″	10.5″	12.4″	14.6″	16.2″	18.2″	20.1″	32.2″	35.0″
Pole Dia w/ Ty-back:	4.5″	7.6″	9.6″	11.8″	13.4″	15.3″	17.2″	29.3″	35.0″

AS-3029
Clamp Kit

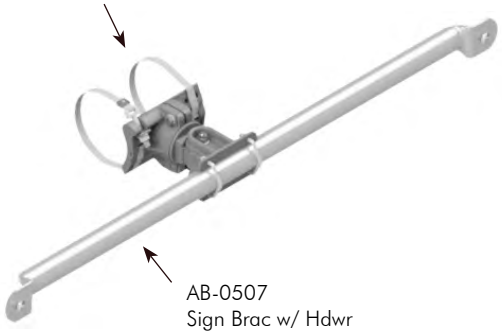

AB-0507
Sign Brac w/ Hdwr

Astro Sign-Brac, Atlas Articulating Band Mount, Formed Tube

		CTC		Band Length		Coating
AS-0135	-		-		-	
		See Sign CTC Table		See Table		PNC=Process No Color P_ _=Paint

Band Length:	29″	42″	56″	72″	114″
Maximum Pole Dia:	7.3″	11.5″	15.9″	21.0″	34.4″

Sign CTC										
Max CTC:	9”	12”	15”	18”	24”	30”	36”	42”	48”	60”
Sign Length:	15”	18”	21”	24”	30”	36”	42”	48”	54”	66”

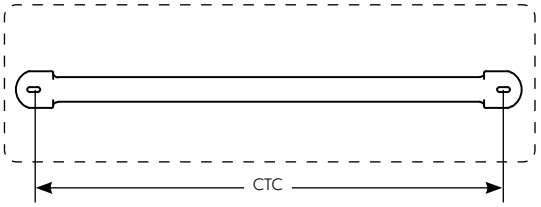

Notes:

90 mph wind zone maximum: 16 sq-ft

1. Capacity listed is only for applications with the clamp kit mounted in the center of the sign.
2. For higher wind zones and multiple brackets use assemblies shown on T6-1 & T6-2.
3. Signs must be properly engineered for specific application.

Note: 1. All assemblies are supplied standard with stainless fasteners.
2. See Reference Section page v for available paint colors.

Astro Sign-Brac Formed Tubes Vertical Extension Mounts

Pelco manufactures a variety of sign brackets in rigid and free-swinging mounts for both flat and internally illuminated signs. Most sign-bracs are available with a cable, band, or tenon mount clamp kit.

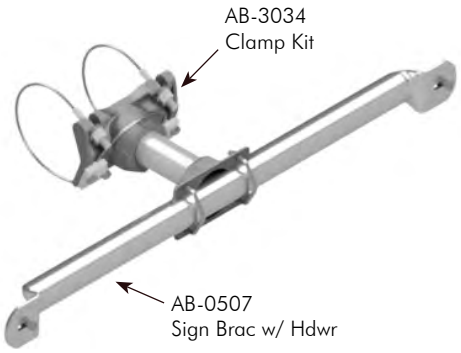

Astro Sign-Brac, Vertical Extension Cable Mount, Formed Tube

AB-0189 - [Nipple Length] - [CTC] - [Cable Length] - [Cable] - [Coating]

- Nipple Length: 5=5″ Nipple, 6=6″ Nipple, 8=8″ Nipple
- CTC: See Sign CTC Table
- Cable Length: See Table
- Cable: Blank=Galv, SS=Stainless
- Coating: PNC=Process No Color, P_ _=Paint

Cable Length:	62″	84″	96″	110″	120″	132″	144″	220″	280″
Maximum Pole Dia:	7.0″	10.5″	12.4″	14.6″	16.2″	18.2″	20.1″	32.2″	35.0″
Pole Dia w/ Ty-back:	4.5″	7.6″	9.6″	11.8″	13.4″	15.3″	17.2″	29.3″	35.0″

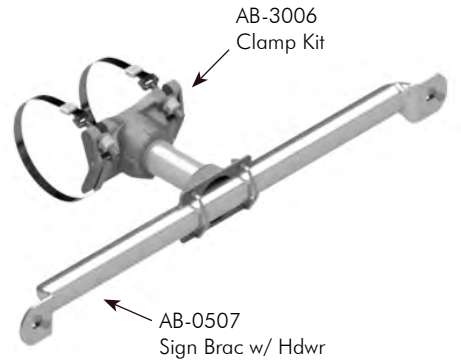

Astro Sign-Brac, Vertical Extension Band Mount, Formed Tube

AB-0134 - [Nipple Length] - [CTC] - [Band Length] - [Coating]

- Nipple Length: 5=5″ Nipple, 6=6″ Nipple, 8=8″ Nipple
- CTC: See Sign CTC Table
- Band Length: See Table
- Coating: PNC=Process No Color, P_ _=Paint

Band Length:	29″	42″	56″	72″	114″
Maximum Pole Dia:	7.3″	11.5″	15.9″	21.0″	34.4″

Sign CTC										
Max CTC:	9”	12”	15”	18”	24”	30”	36”	42”	48”	60”
Sign Length:	15”	18”	21”	24”	30”	36”	42”	48”	54”	66”

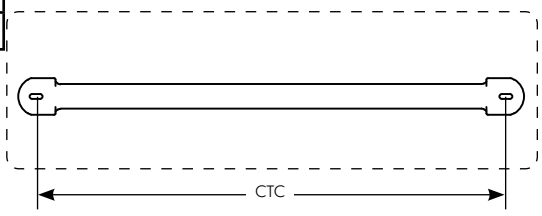

Notes:

90 mph wind zone maximum: 16 sq-ft

1. Capacity listed is only for applications with the clamp kit mounted in the center of the sign.
2. For higher wind zones and multiple brackets use assemblies shown on T6-1 & T6-2.
3. Signs must be properly engineered for specific application.

Note: 1. All assemblies are supplied standard with stainless fasteners.
2. See Reference Section page v for available paint colors.

pelco PELCO PRODUCTS, INC.
ISO 9001 www.intlcert.com

Astro Sign-Brac Electrical Type Stellar Series

Pelco manufactures a variety of sign brackets in rigid and free-swinging mounts for both flat and internally illuminated signs. Most sign-bracs are available with a cable, band, or tenon mount clamp kit.

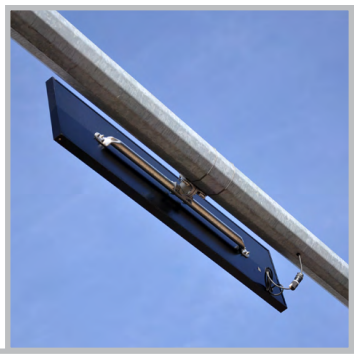

Astro Sign-Brac, Stellar Cable Mount, Back Attachment for Internally Illuminated Signs

AS-0650 - [Tube Length] - [Cable Length] - [Cable] - [Coating]

Tube Length	Cable Length	Cable	Coating
23=23″ Tube 37=37″ Tube 46=46″ Tube 58=58″ Tube 74=74″ Tube	See Table	Blank=Galv SS=Stainless	PNC=Process No Color P_ _=Paint

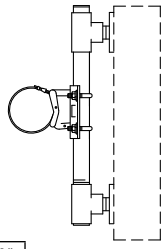

Cable Length:	62″	84″	96″	110″	120″	132″	144″	220″	280″
Maximum Pole Dia:	7.0″	10.5″	12.4″	14.6″	16.2″	18.2″	20.1″	32.2″	35.0″
Pole Dia w/ Ty-back:	4.5″	7.6″	9.6″	11.8″	13.4″	15.3″	17.2″	29.3″	35.0″

Astro Sign-Brac, Stellar Band Mount, Back Attachment for Internally Illuminated Signs

AS-0104 - [Tube Length] - [Band Length] - [Coating]

Tube Length	Band Length	Coating
23=23″ Tube 37=37″ Tube 46=46″ Tube 58=58″ Tube 74=74″ Tube	See Table	PNC=Process No Color P_ _=Paint

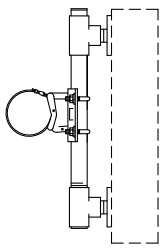

Band Length:	29″	42″	56″	72″	114″
Maximum Pole Dia:	7.3″	11.5″	15.9″	21.0″	34.4″

Note: 1. All assemblies are supplied standard with stainless fasteners.
2. See Reference Section page v for available paint colors.

Astro Sign-Brac Electrical Type Stellar Series

Pelco manufactures a variety of sign brackets in rigid and free-swinging mounts for both flat and internally illuminated signs. Most sign-bracs are available with a cable, band, or tenon mount clamp kit.

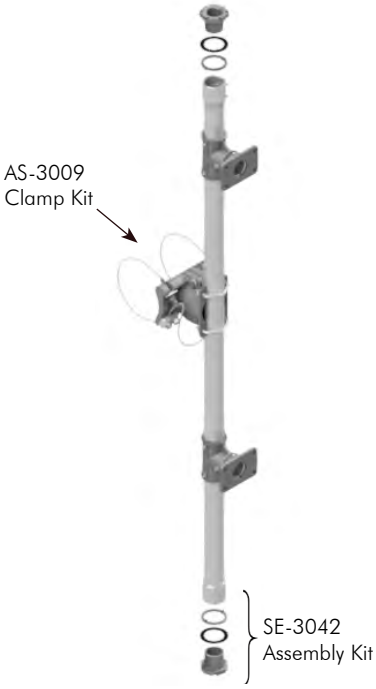

Astro Sign-Brac, Stellar Cable Mount, Back Attachment for Internally Illuminated Signs and Signals

AS-0651 - [Tube Length] - [Cable Length] - [Cable] - [Coating]

Tube Length	Cable Length	Cable	Coating
23=23″ Tube 37=37″ Tube 46=46″ Tube 58=58″ Tube 74=74″ Tube	See Table	Blank=Galv SS=Stainless	PNC=Process No Color P_ _=Paint

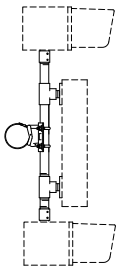

Cable Length:	62″	84″	96″	110″	120″	132″	144″	220″	280″
Maximum Pole Dia:	7.0″	10.5″	12.4″	14.6″	16.2″	18.2″	20.1″	32.2″	35.0″
Pole Dia w/ Ty-back:	4.5″	7.6″	9.6″	11.8″	13.4″	15.3″	17.2″	29.3″	35.0″

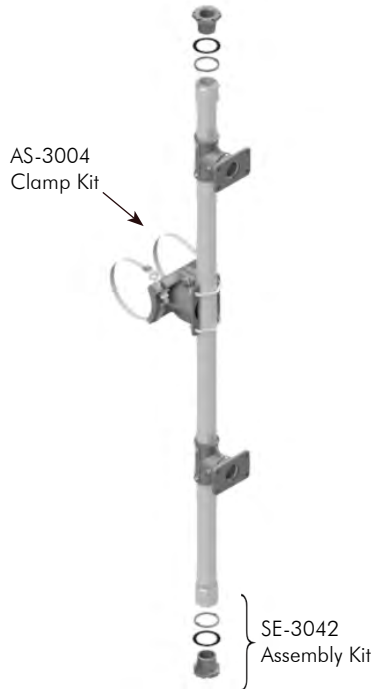

Astro Sign-Brac, Stellar Band Mount, Back Attachment for Internally Illuminated Signs and Signals

AS-0107 - [Tube Length] - [Band Length] - [Coating]

Tube Length	Band Length	Coating
23=23″ Tube 37=37″ Tube 46=46″ Tube 58=58″ Tube 74=74″ Tube	See Table	PNC=Process No Color P_ _=Paint

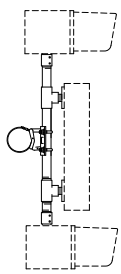

Band Length:	29″	42″	56″	72″	114″
Maximum Pole Dia:	7.3″	11.5″	15.9″	21.0″	34.4″

Note: 1. All assemblies are supplied standard with stainless fasteners.
2. See Reference Section page v for available paint colors.

ISO 9001 www.intlcert.com

Astro Sign-Brac Electrical Type Cable Mount

Pelco manufactures a variety of sign brackets in rigid and free-swinging mounts for both flat and internally illuminated signs. Most sign-bracs are available with a cable, band, or tenon mount clamp kit.

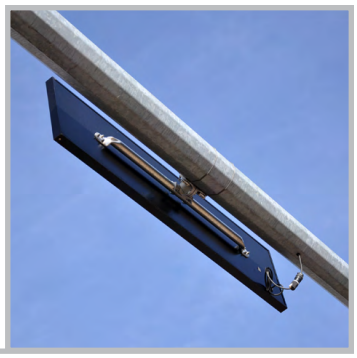

Astro Sign-Brac, Galaxy Cable Mount Top & Bottom Attachment for Internally Illuminated Signs

AG-0652 - [Tube Length] - [Cable Length] - [Cable] - [Coating]

Tube Length	Cable Length	Cable	Coating
23=23″ Tube 37=37″ Tube 46=46″ Tube 58=58″ Tube 74=74″ Tube	See Table	Blank=Galv SS=Stainless	PNC=Process No Color P_ _=Paint

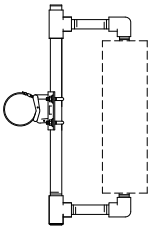

Cable Length:	62″	84″	96″	110″	120″	132″	144″	220″	280″
Maximum Pole Dia:	7.0″	10.5″	12.4″	14.6″	16.2″	18.2″	20.1″	32.2″	35.0″
Pole Dia w/ Ty-back:	4.5″	7.6″	9.6″	11.8″	13.4″	15.3″	17.2″	29.3″	35.0″

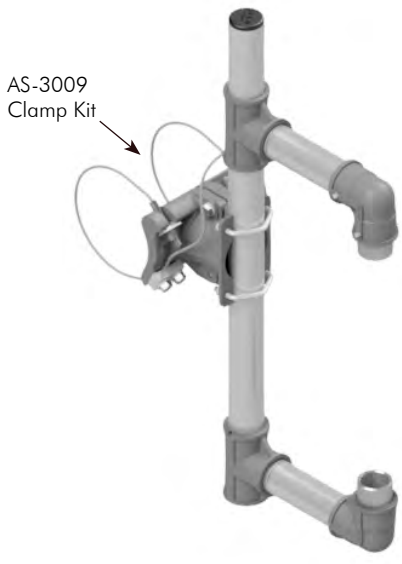

Astro Sign-Brac, Stellar Cable Mount Top & Bottom Attachment for Internally Illuminated Signs

AS-0652 - [Tube Length] - [Cable Length] - [Cable] - [Coating]

Tube Length	Cable Length	Cable	Coating
23=23″ Tube 37=37″ Tube 46=46″ Tube 58=58″ Tube 74=74″ Tube	See Table	Blank=Galv SS=Stainless	PNC=Process No Color P_ _=Paint

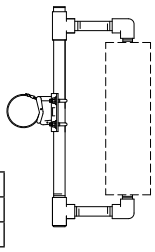

Cable Length:	62″	84″	96″	110″	120″	132″	144″	220″	280″
Maximum Pole Dia:	7.0″	10.5″	12.4″	14.6″	16.2″	18.2″	20.1″	32.2″	35.0″
Pole Dia w/ Ty-back:	4.5″	7.6″	9.6″	11.8″	13.4″	15.3″	17.2″	29.3″	35.0″

Note: 1. All assemblies are supplied standard with stainless fasteners.
2. See Reference Section page v for available paint colors.

Astro Sign-Brac Electrical Type Band Mount

Pelco manufactures a variety of sign brackets in rigid and free-swinging mounts for both flat and internally illuminated signs. Most sign-bracs are available with a cable, band, or tenon mount clamp kit.

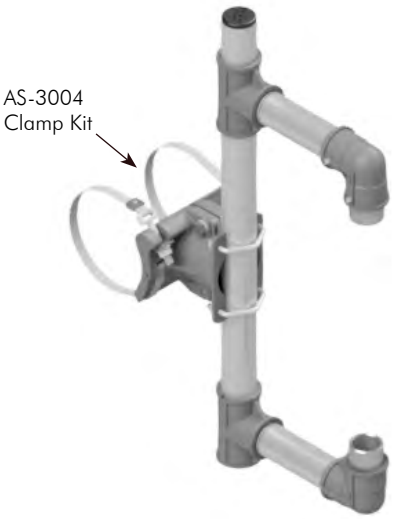

Astro Sign-Brac, Stellar Band Mount Top & Bottom Attachment for Internally Illuminated Signs

	Tube Length		Band Length		Coating
AS-0129	- [ ]	-	[ ]	-	[ ]
	23=23″ Tube 37=37″ Tube 46=46″ Tube 58=58″ Tube 74=74″ Tube		See Table		PNC=Process No Color P_ _=Paint

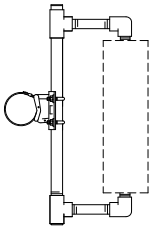

Band Length:	29″	42″	56″	72″	114″
Maximum Pole Dia:	7.3″	11.5″	15.9″	21.0″	34.4″

Note: 1. All assemblies are supplied standard with stainless fasteners.
2. See Reference Section page v for available paint colors.

ISO 9001
www.intlcert.com

Sign Bracket Assy for Rigid Structures Stellar Series

Pelco manufactures a variety of sign brackets in rigid and free-swinging mounts for both flat and internally illuminated signs. The sign bracket for rigid structures is available with an option of tube lengths and 8″ or 16″ sign bar length.

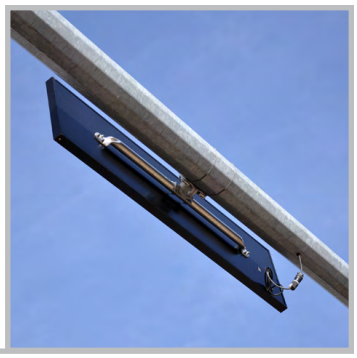

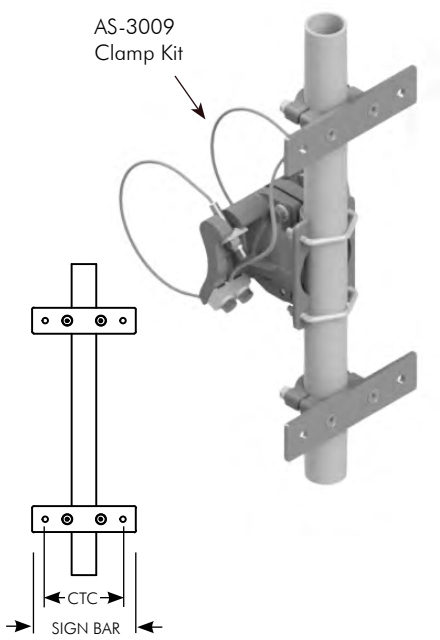

Sign Bracket Assy, Stellar Cable Mount For Rigid Structures w/ Aluminum Tube

AS-0661 - [Cable Length] - [Sign Bar Length] - [Cable Length] - [Cable] - [Coating]

- Cable Length: 18=18″, 24=24″, 30=30″, 36=36″, 42=42″
- Sign Bar Length: 08=8″ w/ Holes 6″ CTC; 16=16″ w/ Holes 9.75″ CTC
- Cable Length: See Table
- Cable: Blank=Galv, SS=Stainless
- Coating: PNC=Process No Color, P_ _=Paint

Cable Length:	62″	84″	96″	110″	120″	132″	144″	220″	280″
Maximum Pole Dia:	7.0″	10.5″	12.4″	14.6″	16.2″	18.2″	20.1″	32.2″	35.0″
Pole Dia w/ Ty-back:	4.5″	7.6″	9.6″	11.8″	13.4″	15.3″	17.2″	29.3″	35.0″

Note: 1. All assemblies are supplied standard with stainless fasteners.
2. See Reference Section page v for available paint colors.

Galaxy T-Spar Sign Bracket

Pelco's Galaxy T-Spar Sign Bracket was designed to work with a 2" square perforated tube. The single cable plate allows for an easy installation and the tube saddle allows multi-directional adjustability. The perforated tube is sold separate.

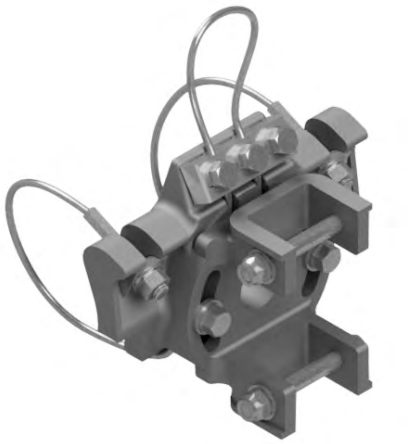

Galaxy T-Spar Assy, Cable Mount

	Cable Length		Cable		Coating
AG-3056 -	[ ]	-	[ ]	-	[ ]
	See Table		Blank=Galv SS=Stainless		PNC=Process No Color P_ _=Paint

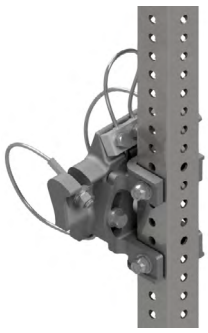

Tube sold separately

Cable Length:	62"	84"	96"	110"	120"	132"	144"	220"	280"
Maximum Pole Dia:	7.0"	10.5"	12.4"	14.6"	16.2"	18.2"	20.1"	32.2"	35.0"
Pole Dia w/ Ty-back:	4.5"	7.6"	9.6"	11.8"	13.4"	15.3"	17.2"	29.3"	35.0"

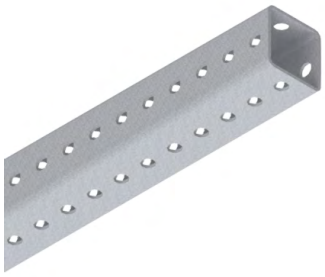

Perforated Tube, 2" x 12 Ga Steel, Galv

	Length		Coating
SE-4191 -	[ ]	-	[ ]
	72"=6' Tube		GLV=Galvanized P_ _=Paint

Note: 1. All assemblies are supplied standard with stainless fasteners.
2. See Reference Section page v for available paint colors.

ISO 9001 www.intlcert.com

pelco PELCO PRODUCTS, INC.

Mast Arm Sign Bracket

Pelco manufactures a variety of sign brackets in rigid and free-swinging mounts for both flat and internally illuminated signs. Assemblies with cable dampeners provide stability in lower wind speeds, but are flexible enough to bend in extreme wind events.

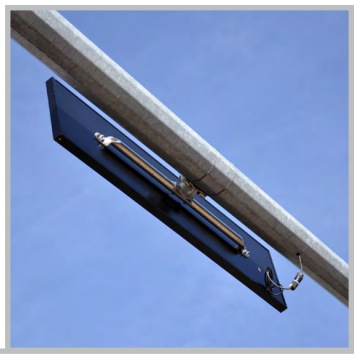

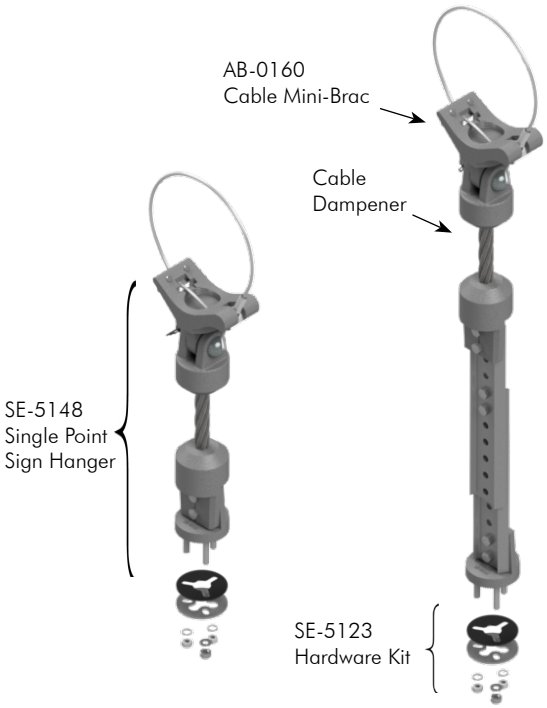

Sign Hanger Assy, Free-Swinging Tri-Stud w/Cable Dampener & Stainless Bushings Cable Mini-Brac Mount, Alum

SE-5146 - [Cable Length] - [Stainless Upgrade] - [Coating]

	Cable Length	Stainless Upgrade	Coating
	See Table	Blank=Galv SS=Stainless	PNC=Process No Color P_ _=Paint

Cable Length:	45″	62″	84″
Maximum Pole Dia:	11.1″	16.6″	22.0″

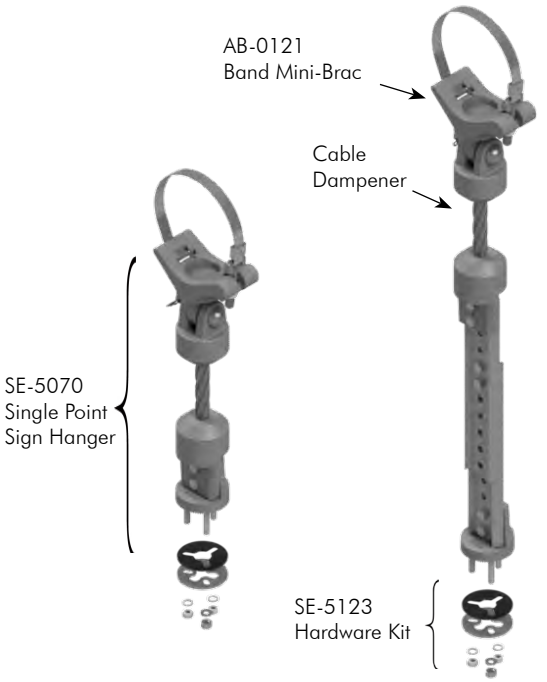

Sign Hanger Assy, Free-Swinging Tri-Stud w/ Cable Dampener & Stainless Bushings Band Mini-Brac Mount, Alum

SE-5015 - [Band Length] - [Stainless Upgrade] - [Coating]

	Band Length	Stainless Upgrade	Coating
	See Table	Blank=Galv SS=Stainless	PNC=Process No Color P_ _=Paint

Band Length:	29″	42″	56″	72″
Maximum Pole Dia:	7.3″	11.5″	15.9″	21.0″

Note: 1. All assemblies are supplied standard with stainless fasteners.
2. See Reference Section page v for available paint colors.

Mast Arm Sign Bracket

Pelco manufactures a variety of sign brackets in rigid and free-swinging mounts for both flat and internally illuminated signs. Assemblies with cable dampeners provide stability in lower wind speeds, but are flexible enough to bend in extreme wind events.

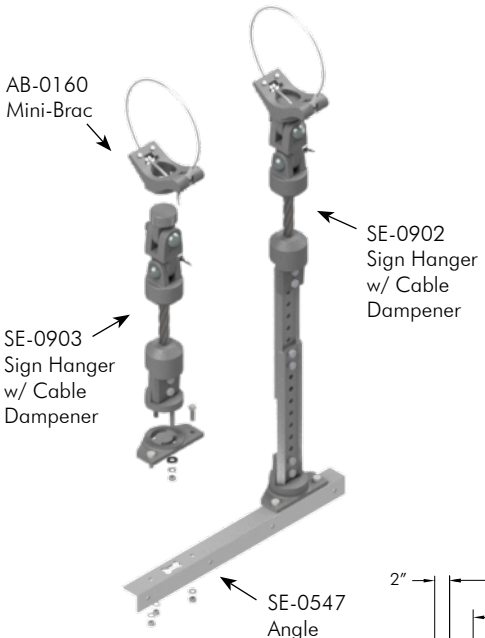

Sign Hanger Assy, Free-Swinging, Cable Dampener w/ Cable Mini-Brac for Overhead Street Name Signs

SE-5188 - [CTC] - [Cable Length] - [Stainless Upgrade] - [Coating]

- CTC: See Sign Table
- Cable Length: See Table
- Stainless Upgrade: Blank=Galv, SS=Stainless
- Coating: PNC=Process No Color, P_ _=Paint

Cable Length:	45″	62″	84″
Maximum Pole Dia:	11.1″	16.6″	22.0″

Note:
Stainless upgrade includes stainless steel pins and cable.

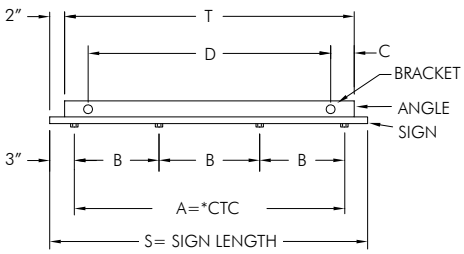

SIGNS 3′-6″ to 9′-0″ LONG					
SIGN LENGTH S	ANGLE LENGTH T	*CTC A	B	C	BRACKET D
2′0″	20″	18″	6″	3″	12″
2′2″	22″	20″	6.7″	4″	14″
2′6″	26″	24″	8″	6″	14″
3′0″	32″	30″	10″	6″	20″
3′6″	38″	36″	12″	7″	24″
4′0″	44″	42″	14″	8″	28″
4′6″	50″	48″	16″	9″	32″
5′0″	56″	54″	18″	10″	36″
5′6″	62″	60″	20″	11″	40″
6′0″	68″	66″	22″	12″	44″
6′6″	74″	72″	24″	13″	48″
6′10″	78″	76″	25.3″	14″	50″
7′0″	80″	78″	26″	14″	52″
7′6″	86″	84″	28″	15″	56″
8′0″	92″	90″	30″	16″	60″
8′6″	98″	96″	32″	17″	68″
9′0″	104″	102″	34″	18″	68″
9′6″	110″	108″	36″	19″	72″
10′0″	116″	114″	38″	20″	76″

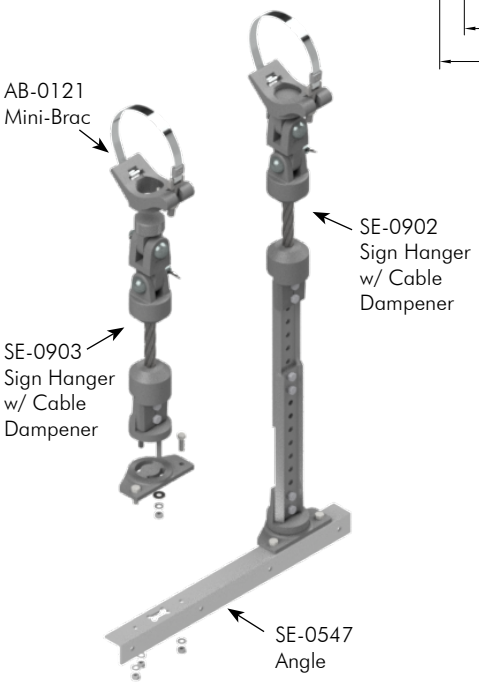

Sign Hanger Assy, Free-Swinging, Cable Dampener w/ Band Mini-Brac for Overhead Street Name Sign

SE-5128 - [CTC] - [Band Length] - [Stainless Upgrade] - [Coating]

- CTC: See Sign Table
- Band Length: See Table
- Stainless Upgrade: Blank=Galv, SS=Stainless
- Coating: PNC=Process No Color, P_ _=Paint

Band Length:	29″	42″	56″	72″
Maximum Pole Dia:	7.3″	11.5″	15.9″	21.0″

Note:
Stainless upgrade includes stainless steel pins.

Note: 1. All assemblies are supplied standard with stainless steel slotted washers and fasteners with galvanized pins and cable. Stainless upgrade available.
2. See Reference Section page v for available paint colors.

ISO 9001 www.intlcert.com

Span Wire Sign Hanger Assemblies

Pelco manufactures a variety of sign brackets in rigid and free-swinging mounts for both flat and internally illuminated signs. Assemblies with cable dampeners provide stability in lower wind speeds, but are flexible enough to bend in extreme wind events.

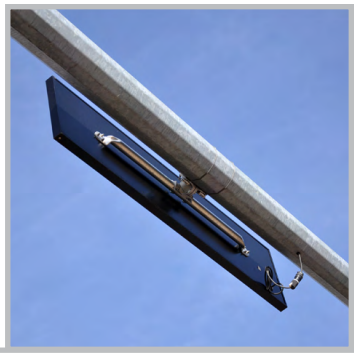

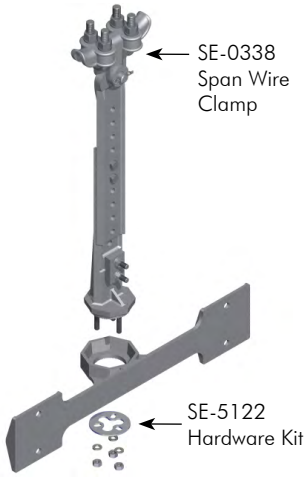

Span Wire Sign Hanger, 16" CTC, Adjustable with Tether, Alum

	Bushing		Stainless Upgrade		Coating
SE-5116 -	☐	-	☐	-	☐
	Blank=None SS=Stainless Bushing		Blank=Galv SS=Stainless		PNC=Process No Color P_ _=Paint

Note:
Stainless upgrade includes stainless steel fasteners and pins on span wire clamp.

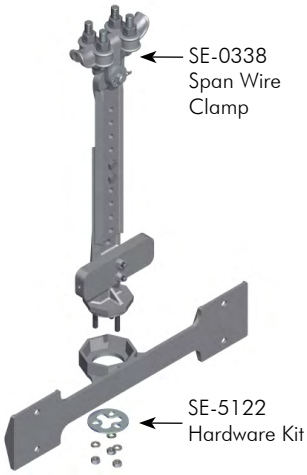

Span Wire Sign Hanger, 16" CTC, Adjustable with Stabilizer Bar, Alum

	Bushing		Stainless Upgrade		Coating
SE-5114 -	☐	-	☐	-	☐
	Blank=None SS=Stainless Bushing		Blank=Galv SS=Stainless		PNC=Process No Color P_ _=Paint

Note:
Stainless upgrade includes stainless steel fasteners and pins on span wire clamp.

Span Wire Sign Hanger, Double, 16" CTC, Adjustable with Tether, Alum

	Bushing		Stainless Upgrade		Coating
SE-5112 -	☐	-	☐	-	☐
	Blank=None SS=Stainless Bushing		Blank=Galv SS=Stainless		PNC=Process No Color P_ _=Paint

Note:
Stainless upgrade includes stainless steel fasteners and pins on span wire clamp.

Note: 1. All assemblies are supplied standard with stainless steel slotted washers and fasteners with galvanized hardware on span wire clamps. Stainless upgrade available.
2. See Reference Section for available paint colors.

Span Wire Sign Hanger Assemblies

Pelco manufactures a variety of sign brackets in rigid and free-swinging mounts for both flat and internally illuminated signs. Assemblies with cable dampeners provide stability in lower wind speeds, but are flexible enough to bend in extreme wind events.

Sign Hanger Assy, Free-Swinging w/ Span Wire Clamp for Overhead Street Name Sign

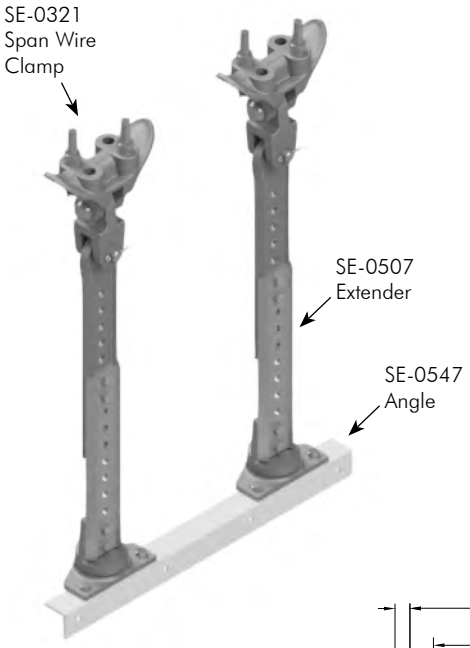

SE-5219 - [CTC] - [Extender] - [Bushing] - [Stainless Upgrade] - [Coating]

CTC	Extender	Bushing	Stainless Upgrade	Coating
*See Chart	Blank=No Extender 11=11″ Extenders	Blank=None SS=Stainless Bushing	Blank=Galv SS=Stainless	PNC=Process No Color P_ _=Paint

Note:
Shown with extenders.
Stainless upgrade includes stainless steel fasteners and pins on span wire clamp.

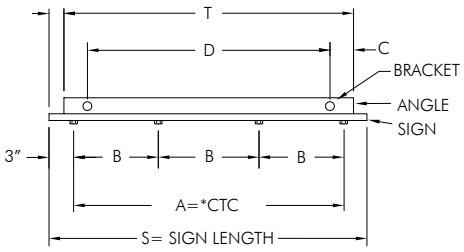

SIGNS 3′-6″ to 9′-0″ LONG					
SIGN LENGTH S	ANGLE LENGTH T	*CTC A	B	C	BRACKET D
2′0″	20″	18″	6″	3″	12″
2′2″	22″	20″	6.7″	4″	14″
2′6″	26″	24″	8″	6″	14″
3′0″	32″	30″	10″	6″	20″
3′6″	38″	36″	12″	7″	24″
4′0″	44″	42″	14″	8″	28″
4′6″	50″	48″	16″	9″	32″
5′0″	56″	54″	18″	10″	36″
5′6″	62″	60″	20″	11″	40″
6′0″	68″	66″	22″	12″	44″
6′6″	74″	72″	24″	13″	48″
6′10″	78″	76″	25.3″	14″	50″
7′0″	80″	78″	26″	14″	52″
7′6″	86″	84″	28″	15″	56″
8′0″	92″	90″	30″	16″	60″
8′6″	98″	96″	32″	17″	68″
9′0″	104″	102″	34″	18″	68″
9′6″	110″	108″	36″	19″	72″
10′0″	116″	114″	38″	20″	76″

Note: 1. All assemblies are supplied standard with stainless steel slotted washers and fasteners with galvanized hardware on span wire clamps. Stainless upgrade available.
2. See Reference Section page v for available paint colors.

PELCO PRODUCTS, INC.
ISO 9001
www.intlcert.com

Span Wire Sign Hanger Assemblies

Pelco manufactures a variety of sign brackets in rigid and free-swinging mounts for both flat and internally illuminated signs. Assemblies with cable dampeners provide stability in lower wind speeds, but are flexible enough to bend in extreme wind events.

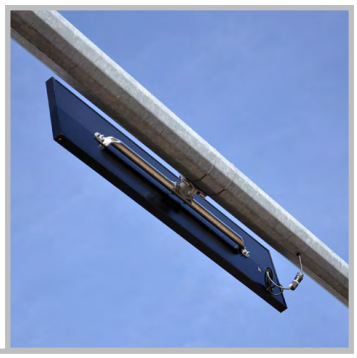

Sign Hanger Assy, Free-Swinging Span Wire Mount, Tri-Stud, Alum

SE-5214 - [Extender] - [Bushing] - [Stainless Upgrade] - [Coating]

- Extender: Blank=No Extender; 11=11″ Extenders
- Bushing: Blank=None; SS=Stainless Bushing
- Stainless Upgrade: Blank=Galv; SS=Stainless
- Coating: PNC=Process No Color; P_ _=Paint

Note:
Shown with extenders.
Stainless upgrade includes stainless steel fasteners and pins on span wire clamp.

Note: 1. All assemblies are supplied standard with stainless steel slotted washers and fasteners with galvanized hardware on span wire clamps. Stainless upgrade available.
2. See Reference Section page v for available paint colors.

Span Wire Sign Hanger Assemblies

Pelco manufactures a variety of sign brackets in rigid and free-swinging mounts for both flat and internally illuminated signs. Assemblies with cable dampeners provide stability in lower wind speeds, but are flexible enough to bend in extreme wind events.

Span Wire Sign Hanger, 6" & 14" CTC
Serrated Span Wire Clamp, Alum

SE-3213
Serrated Span
Wire Clamp

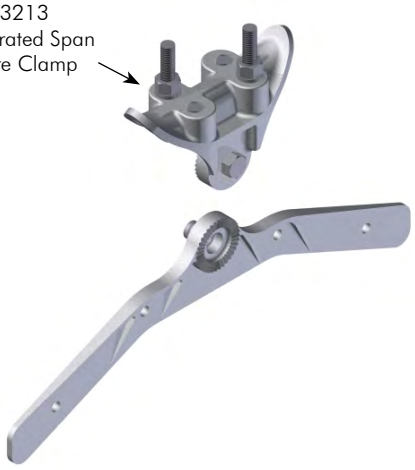

SE-5115 - [ ] - [ ]

Stainless Upgrade: Blank=Galv, SS=Stainless

Coating: PNC=Process No Color, P_ _=Paint

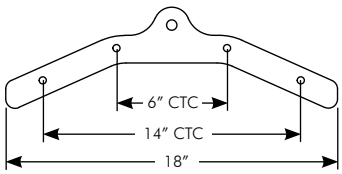

Note:
Stainless upgrade includes stainless steel fasteners and pins on span wire clamp.

Span Wire Sign Hanger, 6" & 14" CTC
90° Span Wire Clamp, Adjustable, Alum

SE-3212
90° Span wire
Clamp

SE-5111 - [ ] - [ ]

Stainless Upgrade: Blank=Galv, SS=Stainless

Coating: PNC=Process No Color, P_ _=Paint

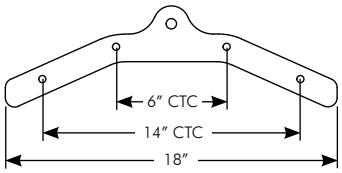

Note:
Stainless upgrade includes stainless steel fasteners and pins on span wire clamp.

Note: 1. All assemblies are supplied standard with stainless steel slotted washers and fasteners with galvanized hardware on span wire clamps. Stainless upgrade available.
2. See Reference Section page v for available paint colors.

ISO 9001 www.intlcert.com

Span Wire Sign Hanger Assemblies

Pelco manufactures a variety of sign brackets in rigid and free-swinging mounts for both flat and internally illuminated signs. Assemblies with cable dampeners provide stability in lower wind speeds, but are flexible enough to bend in extreme wind events.

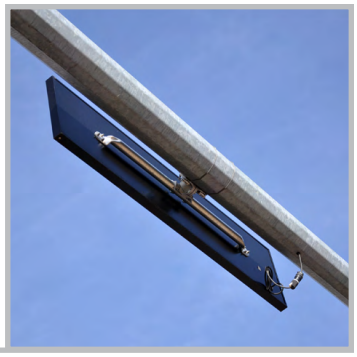

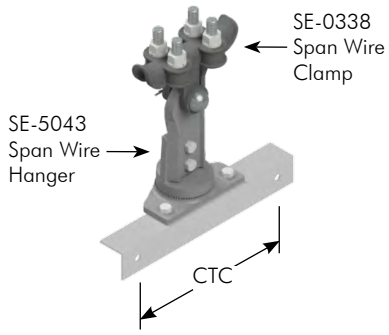

Sign Hanger Assy, Iron Span Wire Clamp, Alum

SE-5190 - [CTC] - [Bushing] - [Stainless Upgrade] - [Coating]

CTC	Bushing	Stainless Upgrade	Coating
See Chart	Blank=None SS=Stainless Bushing	Blank=Galv SS=Stainless	PNC=Process No Color P_ _=Paint

Note:
Stainless upgrade includes stainless steel fasteners and pins on span wire clamp.

CTC	SIGN
11″	16″
13″	18″
19″	24″
25″	30″
31″	36″
37″	42″

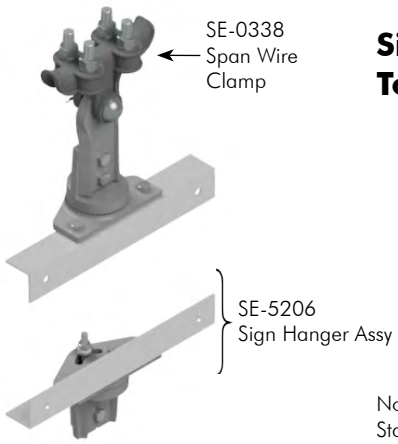

Sign Hanger Assy, Iron Span Wire Clamp, Top & Bottom Mount w/ Tether, Alum

SE-5189 - [CTC] - [Bushing] - [Stainless Upgrade] - [Coating]

CTC	Bushing	Stainless Upgrade	Coating
See Chart	Blank=None SS=Stainless Bushing	Blank=Galv SS=Stainless	PNC=Process No Color P_ _=Paint

Note:
Stainless upgrade includes stainless steel fasteners and pins on span wire clamp.

CTC	SIGN
11″	16″
13″	18″
19″	24″
25″	30″
31″	36″
37″	42″

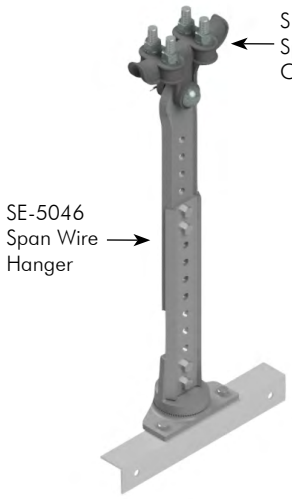

Sign Hanger Assy, Adjustable, Iron Span Wire Clamp, Alum

SE-5191 - [CTC] - [Tether Assy] - [Bushing] - [Stainless Upgrade] - [Coating]

CTC	Tether Assy	Bushing	Stainless Upgrade	Coating
See Chart	Blank=None T=Tether	Blank=None SS=Stainless Bushing	Blank=Galv SS=Stainless	PNC=Process No Color P_ _=Paint

Note:
Stainless upgrade includes stainless steel fasteners and pins on span wire clamp.

CTC	SIGN
11″	16″
13″	18″
19″	24″
25″	30″
31″	36″
37″	42″

Note: 1. All assemblies are supplied standard with stainless steel slotted washers and fasteners with galvanized hardware on span wire clamps. Stainless upgrade available.
2. See Reference Section page v for available paint colors.

Span Wire Sign Hanger Assemblies

Pelco manufactures a variety of sign brackets in rigid and free-swinging mounts for both flat and internally illuminated signs. Assemblies with cable dampeners provide stability in lower wind speeds, but are flexible enough to bend in extreme wind events.

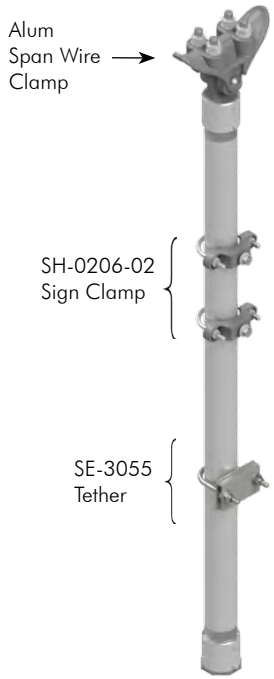

Span Wire Sign Hanger Assy, Free-Swinging Alum Span Wire Clamp, Gusseted Tube & Tether, Alum

	Tube Length		Bushing		Stainless Upgrade		Coating
SE-5226	- ☐	-	☐	-	☐	-	☐
	37=37″ Tube 52=52″ Tube 65=65″ Tube 72=72″ Tube 96=96″ Tube		Blank=None SS=Stainless Bushing		Blank=Galv SS=Stainless		PNC=Process No Color P_ _=Paint

Note:
Stainless upgrade includes stainless steel fasteners and pins on span wire clamp.

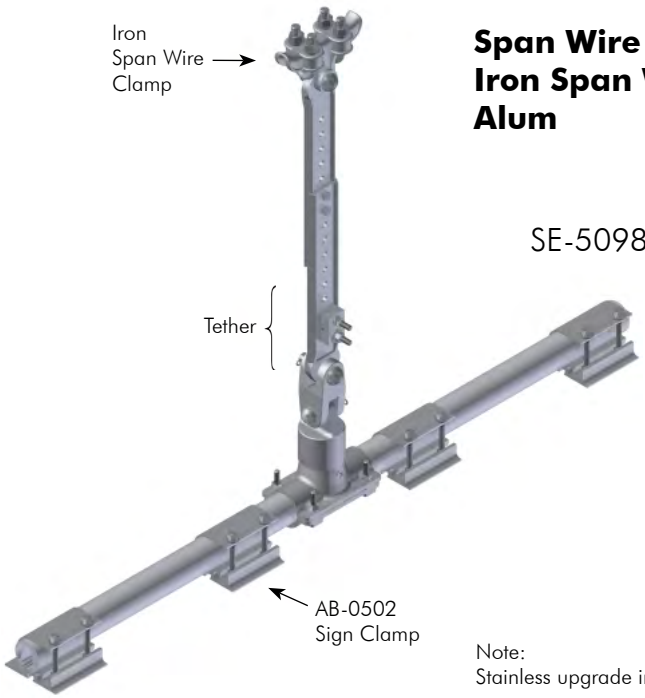

Span Wire Sign Hanger Assy, Free-Swinging Iron Span Wire Clamp, Tether & Sign Clamps, Alum

	Bushing		Stainless Upgrade		Coating
SE-5098	- ☐	-	☐	-	☐
	Blank=None SS=Stainless Bushing		Blank=Galv SS=Stainless		PNC=Process No Color P_ _=Paint

Note:
Stainless upgrade includes stainless steel fasteners and pins on span wire clamp.

Note: 1. All assemblies are supplied standard with stainless steel slotted washers and fasteners with galvanized hardware on span wire clamps. Stainless upgrade available.
2. See Reference Section page v for available paint colors.

Span Wire Sign Hanger Assemblies

Pelco manufactures a variety of sign brackets in rigid and free-swinging mounts for both flat and internally illuminated signs. Assemblies with cable dampeners provide stability in lower wind speeds, but are flexible enough to bend in extreme wind events.

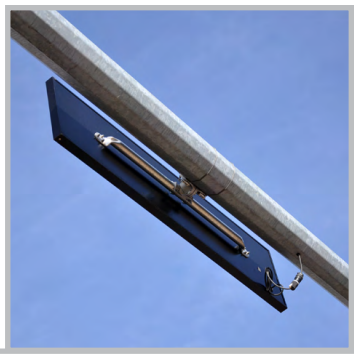

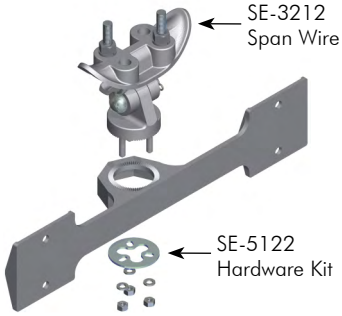

Free-Swinging Sign Hanger, 90° Span Wire Clamp, 16" CTC, Alum

SE-5117 - [Bushing] - [Stainless Upgrade] - [Coating]

Bushing: Blank=None, SS=Stainless Bushing
Stainless Upgrade: Blank=Galv, SS=Stainless
Coating: PNC=Process No Color, P__=Paint

Note:
Stainless upgrade includes stainless steel fasteners and pins on span wire clamp.

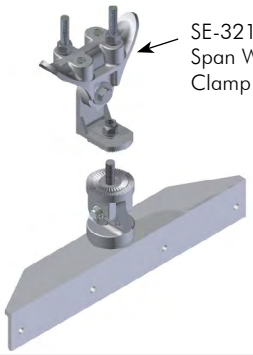

Free-Swinging Sign Hanger, Serrated Span Wire Clamp, Adjustable, 16-1/2" CTC, Alum

SE-5169 - [Bushing] - [Stainless Upgrade] - [Coating]

Bushing: Blank=None, SS=Stainless Bushing
Stainless Upgrade: Blank=Galv, SS=Stainless
Coating: PNC=Process No Color, P__=Paint

Note:
Stainless upgrade includes stainless steel fasteners and pins on span wire clamp.

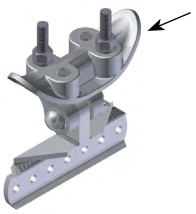

Free-Swinging Sign Hanger, 90° Span Wire Clamp, 7-Hole, Alum

SE-5167 - [Bushing] - [Stainless Upgrade] - [Coating]

Bushing: Blank=None, SS=Stainless Bushing
Stainless Upgrade: Blank=Galv, SS=Stainless
Coating: PNC=Process No Color, P__=Paint

Note:
Stainless upgrade includes stainless steel fasteners and pins on span wire clamp.

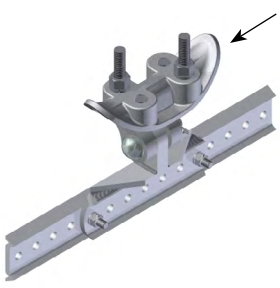

Free-Swinging Sign Hanger, 90° Span Wire Clamp, Extender, Alum

SE-5168 - [CTC] - [Stainless Upgrade] - [Coating]

CTC: See Chart
Stainless Upgrade: Blank=Galv, SS=Stainless
Coating: PNC=Process No Color, P__=Paint

CTC	EXTENDER
15"	16"
21"	22"
33"	34"

Note:
Stainless upgrade includes stainless steel fasteners and pins on span wire clamp.

Note: 1. All assemblies are supplied standard with stainless steel slotted washers and fasteners with galvanized hardware on span wire clamps. Stainless upgrade available.
2. See Reference Section page v for available paint colors.

Sign Mount Assemblies

Pelco manufactures a variety of sign brackets in rigid and free-swinging mounts for both flat and internally illuminated signs. Assemblies with cable dampeners provide stability in lower wind speeds, but are flexible enough to bend in extreme wind events.

Rear View

Front View

Adjustable Sign Mount Assy, Mast Arm Mount w/ Zee Bar, Alum

SH-0112 - [Zee Bar CTC] - [Coating]

Zee Bar CTC: 24=24″, 30=30″, 36=36″, 42=42″, Blank=None

Coating: PNC=Process No Color, P_ _=Paint

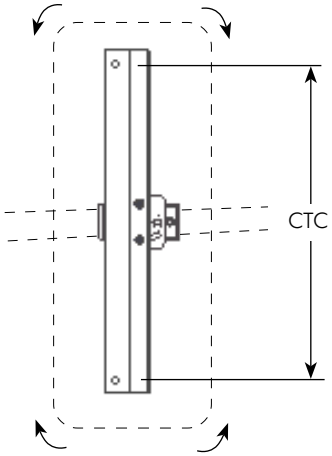

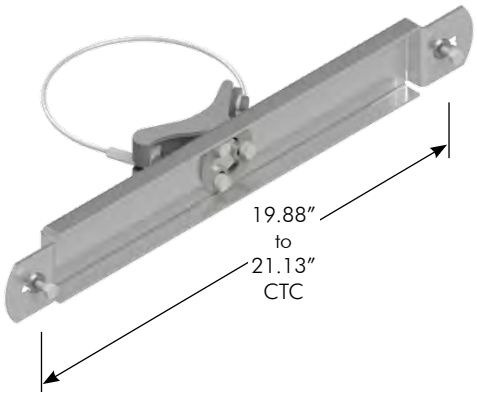

Sign Mount Assy, Regulatory Cable Mini-Brac, Alum

SH-3568 - [Cable Length] - [Cable] - [Coating]

Cable Length: See Table

Cable: Blank=Galv, SS=Stainless

Coating: PNC=Process No Color, P_ _=Paint

Cable Length:	45″	62″	84″
Maximum Pole Dia:	11.1″	16.6″	22.0″

Note:
Maximum sign size of 36″ x 36″ for 100 MPH winds.

Note: 1. All assemblies are supplied standard with stainless fasteners.
2. See Reference Section page v for available paint colors.
3. See Section T16 for additional sign mounting assemblies.

Sign Accessories

Pelco's safety cable assemblies are available for span wire, Astro-Brac, and sign hanger assemblies.

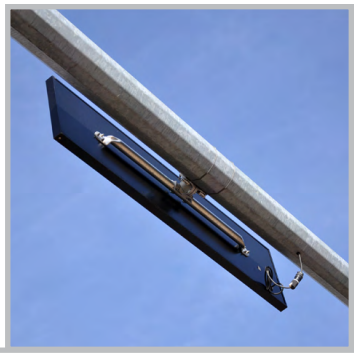

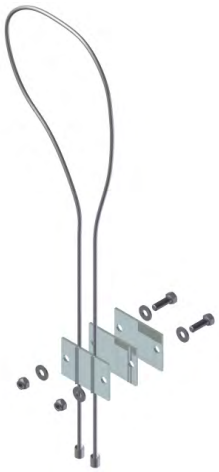

Safety Cable for Span Wire

	Cable Length		Cable
SE-3294 -	☐	-	☐
	84=84″ 96=96″ 110=110″		Blank=Galv SS=Stainless

Note:
Cable length refers to overal length. Assembled length is half of the cable length.

Safety Cable for Astro-Brac

	Cable Length		Cable
AB-0503 -	☐	-	☐
	84=84″ 96=96″ 110=110″		Blank=Galv SS=Stainless

Note:
Cable length refers to overal length. Assembled length is half of the cable length.

Safety Cable for Sign Hangers, Stainless

	Cable Length		
SH-1867 -	☐	-	SS
	24=24″ 48=48″ 72=72″ 100=100″ 120=120″		

Note:
Cable length refers to overal length. Assembled length is half of the cable length.

Note: 1. All assemblies are supplied standard with stainless fasteners.

Sign Accessories

Accessories for sign mountings such as hangers, extenders, and tethers are available in a variety of configurations.

Hanger Assy, Extender Connector for 1/2" Slot, w/ 1-1/4" Bolts, Alum

SE-5037 - [Bushing] - [Coating]

Bushing: Blank=None, SS=Stainless Bushing

Coating: PNC=Process No Color, P__=Paint

Hanger Assy, Extender Connector for 3/4" Slot, w/ 1-1/4" Bolts, Alum

SE-5197 - [Bushing] - [Coating]

Bushing: Blank=None, SS=Stainless Bushing

Coating: PNC=Process No Color, P__=Paint

SE-5123 Hardware Kit

Hanger & Body Assy for 1/2" Slot, Tri-Stud, Alum

SE-5036 - [Bushing] - [Coating]

Bushing: Blank=None, SS=Stainless Bushing

Coating: PNC=Process No Color, P__=Paint

Extender Assy for 1/2" Slot, w/ Extender Connector & Extender, Alum

SE-5180 - [Extender Length] - [Bushing] - [Coating]

Extender Length: 11=11", 19=19", 40=40", 72=72"

Bushing: Blank=None, SS=Stainless Bushing

Coating: PNC=Process No Color, P__=Paint

Note: 1. All assemblies are supplied standard with stainless steel slotted washer and fasteners.
2. See Reference Section page v for available paint colors.

Sign Accessories

Accessories for sign mountings such as hangers, extenders, and tethers are available in a variety of configurations.

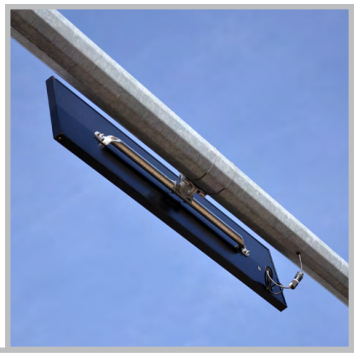

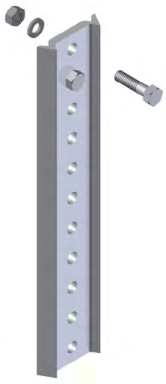

Extender, Alum w/ 5/16"-18 x 1-1/4" Bolts

Extender Length

SE-5181 - [ ] - PNC

06=6"
11=11"
19=19"
24=24"
40=40"
72=72"

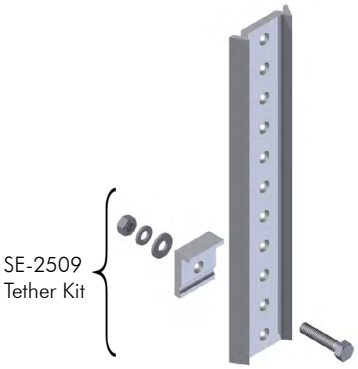

Extender Assy w/ Tether, Alum w/ 5/16"-18 x 1-1/2" Bolts

Extender Length

SE-5051 - [ ] - PNC

06=6"
11=11"
19=19"
24=24"
40=40"
72=72"

Extender Assy w/ 11" Extenders, Alum w/ 5/16"-18 x 1" & 1-1/2" Bolts

Coating

SE-5069 - [ ]

PNC=Process No Color
P_ _=Paint

Note: 1. All assemblies are supplied standard with stainless fasteners.
2. See Reference Section page v for available paint colors.

Sign Accessories

Sign mountings accessories such as hangers, extenders, cable dampeners, tethers, and sign-brac tube are available in a variety of configurations.

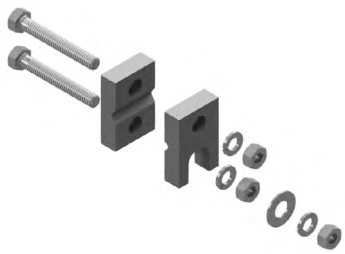

Tether Plate Assembly, Alum w/ 5/16"-18 x 2-1/4" Bolts

SE-5039-PNC

Tether Plate Assembly, Alum w/ 5/16"-18 x 1-1/2" Bolts

SE-2509-PNC

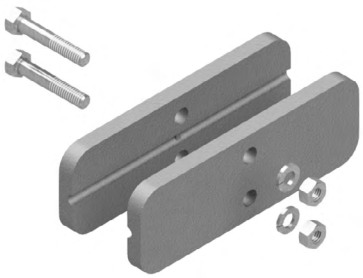

Tether Plate Assembly, Alum w/ Stabilizer Bars & 5/16"-18 x 1-3/4" Bolts

SE-2512 - ☐

Coating

PNC=Process No Color
P__=Paint

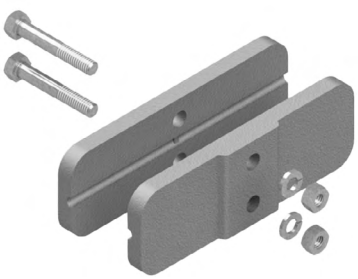

Tether Plate Assembly, Alum w/ Stabilizer Bar, Block, & 5/16"-18 x 2" Bolts

SE-2519 - ☐

Coating

PNC=Process No Color
P__=Paint

Note: 1. All assemblies are supplied standard with stainless fasteners.
2. See Reference Section page v for available paint colors.

Sign Accessories

Sign mountings accessories such as hangers, extenders, cable dampeners, tethers, and sign-brac tube are available in a variety of configurations.

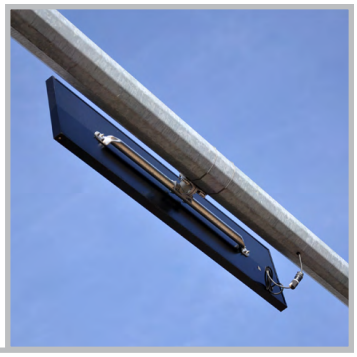

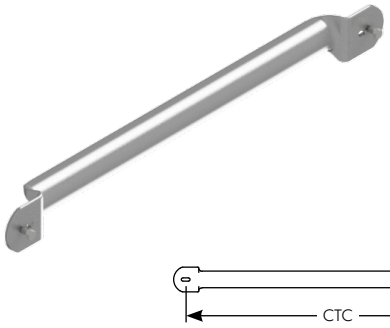

Sign-Brac Tube w/ 5/16"-18 Hardware, 1-1/2" Sch 10 Alum

AB-0507 - [CTC] - [Coating]

CTC: See Table

Coating: PNC=Process No Color, P_ _=Paint

Max CTC:	9"	12"	15"	18"	24"	30"	36"	42"	48"	60"
Sign Length:	15"	18"	21"	24"	30"	36"	42"	48"	54"	66"

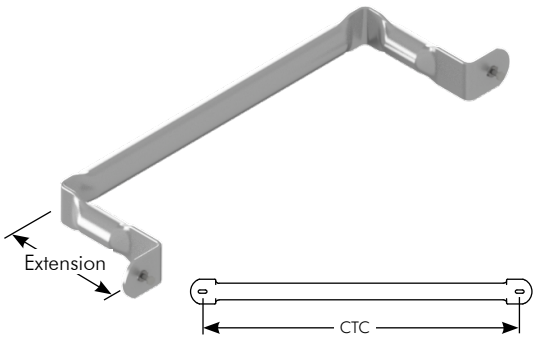

Sign-Brac Tube, Extended w/ 5/16"-18 Hardware, 1-1/2" Sch 10 Alum

AB-0365 - [Extension] - [CTC] - [Coating]

Extension: 6=6" Extension, 8=8" Extension, 12=12" Extension

CTC: See Table

Coating: PNC=Process No Color, P_ _=Paint

Max CTC:	9"	12"	15"	18"	24"	30"	36"	42"	48"
Sign Length:	15"	18"	21"	24"	30"	36"	42"	48"	54"

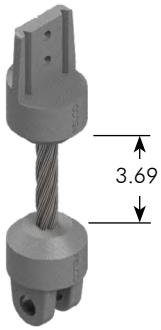

Cable Dampener, Span Wire, Alum w/ Double Clevis & 3/4" Stainless Cable

SE-0700 - [Bushing] - [Coating]

Bushing: Blank=None, SS=Stainless Bushing

Coating: PNC=Process No Color, P_ _=Paint

Cable Dampener, Span Wire, Alum w/ Single Clevis & 3/4" Stainless Cable

SE-0701 - [Bushing] - [Coating]

Bushing: Blank=None, SS=Stainless Bushing

Coating: PNC=Process No Color, P_ _=Paint

Note: 1. All assemblies are supplied standard with stainless fasteners.
2. See Reference Section page v for available paint colors.

This page is intentionally left blank.

PELCO PRODUCTS, INC.

ISO 9001
www.intlcert.com

Astro-Brac 1-Piece Camera Bracket Cable Mount

Pelco makes adjustable brackets for cameras, sensors and antennas that can mount a variety of traffic industry devices. Video Detection camera brackets are available for mast arm, post top, span wire or side-of-pole applications.

Camera Bracket, 1-Piece Extended Tilt & Pan, Alum Galaxy Cable Mount

	1.94" OD Tube Length		Cable Length		Cable		Coating
AG-0175 -	[ ]	-	[ ]	-	[ ]	-	[ ]
	23=23" Tube 37=37" Tube 46=46" Tube 58=58" Tube 74=74" Tube		See Table		Blank=Galv SS=Stainless		PNC=Process No Color P_ _=Paint

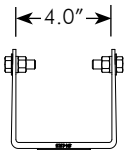

Cable Length:	62"	84"	96"	110"	120"	132"	144"	220"	280"
Maximum Pole Dia:	7.0"	10.5"	12.4"	14.6"	16.2"	18.2"	20.1"	32.2"	35.0"
Pole Dia w/ Ty-back:	4.5"	7.6"	9.6"	11.8"	13.4"	15.3"	17.2"	29.3"	35.0"

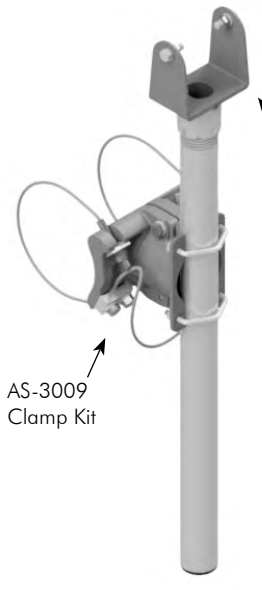

Camera Bracket, 1-Piece Extended Tilt & Pan, Alum Stellar Cable Mount

	1.94" OD Tube Length		Cable Length		Cable		Coating
AS-0175 -	[ ]	-	[ ]	-	[ ]	-	[ ]
	23=23" Tube 37=37" Tube 46=46" Tube 58=58" Tube 74=74" Tube		See Table		Blank=Galv SS=Stainless		PNC=Process No Color P_ _=Paint

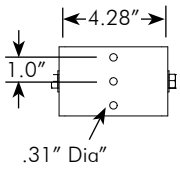

Cable Length:	62"	84"	96"	110"	120"	132"	144"	220"	280"
Maximum Pole Dia:	7.0"	10.5"	12.4"	14.6"	16.2"	18.2"	20.1"	32.2"	35.0"
Pole Dia w/ Ty-back:	4.5"	7.6"	9.6"	11.8"	13.4"	15.3"	17.2"	29.3"	35.0"

Note: 1. All assemblies are supplied standard with stainless steel fasteners.
2. See T7-27-and T7-28 for camera mounting brackets.
3. See Reference Section page v for available paint colors.

Astro-Brac
1-Piece Camera Bracket
Band and Tenon Mount

Pelco makes adjustable brackets for cameras, sensors and antennas that can mount a variety of traffic industry devices. Video Detection camera brackets are available for mast arm, post top, span wire or side-of-pole applications.

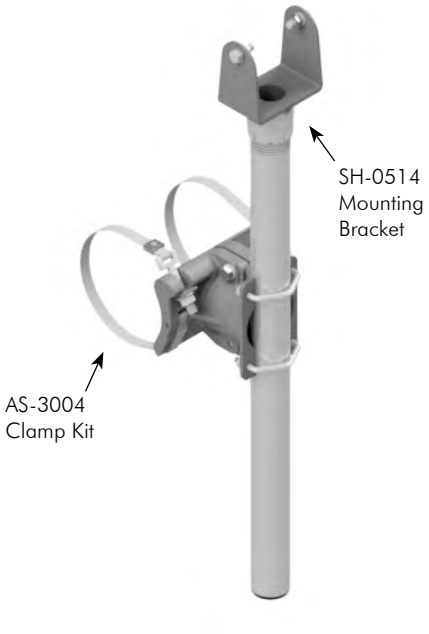

Camera Bracket, 1-Piece Extended Tilt & Pan, Alum Stellar Band Mount

AS-0170 - [1.94″ OD Tube Length] - [Band Length] - [Coating]

1.94″ OD Tube Length:
23=23″ Tube
37=37″ Tube
46=46″ Tube
58=58″ Tube
74=74″ Tube

Band Length: See Table

Coating:
PNC=Process No Color
P_ _=Paint

Band Length:	29″	42″	56″	72″	114″
Maximum Pole Dia:	7.3″	11.5″	15.9″	21.0″	34.4″

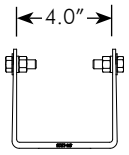

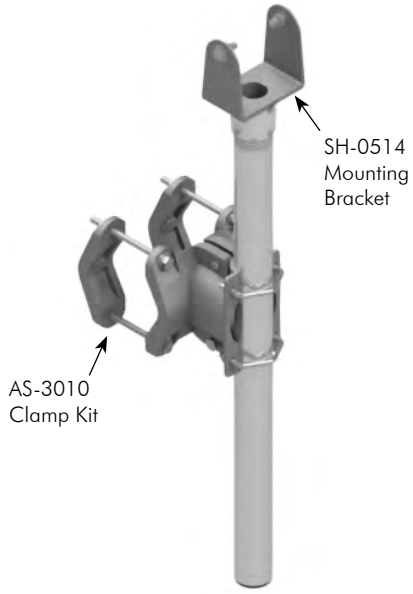

Camera Bracket, 1-Piece Extended Tilt & Pan, Alum Stellar Tenon Mount

AS-0629 - [1.94″ OD Tube Length] - [Coating]

1.94″ OD Tube Length:
23=23″ Tube
37=37″ Tube
46=46″ Tube
58=58″ Tube
74=74″ Tube

Coating:
PNC=Process No Color
P_ _=Paint

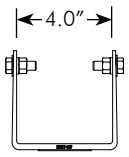

Note:
Fits 1.9″ to 4.5″ diameter.

Note: 1. All assemblies are supplied standard with stainless steel fasteners.
2. See T7-27-and T7-28 for camera mounting brackets.
3. See Reference Section page v for available paint colors.

ISO 9001
www.intlcert.com

Astro-Brac
1-Piece Camera Bracket with Service Wire Outlet

Pelco makes adjustable brackets for cameras, sensors and antennas that can mount a variety of traffic industry devices. Video Detection camera brackets are available for mast arm, post top, span wire or side-of-pole applications.

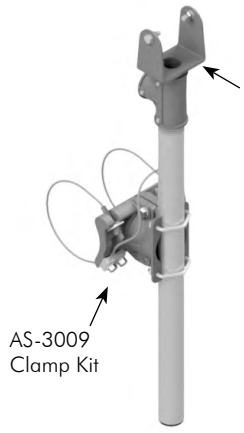

Camera Bracket, 1-Piece Extended Tilt & Pan w/ Service Wire Outlet, Alum Stellar Cable Mount

AS-0166 - [1.94" OD Tube Length] - [Cable Length] - [Cable] - [Coating]

1.94" OD Tube Length	Cable Length	Cable	Coating
23=23" Tube 37=37" Tube 46=46" Tube 58=58" Tube 74=74" Tube	See Table	Blank=Galv SS=Stainless	PNC=Process No Color P_ _=Paint

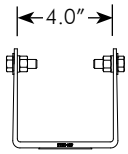

Cable Length:	62"	84"	96"	110"	120"	132"	144"	220"	280"
Maximum Pole Dia:	7.0"	10.5"	12.4"	14.6"	16.2"	18.2"	20.1"	32.2"	35.0"
Pole Dia w/ Ty-back:	4.5"	7.6"	9.6"	11.8"	13.4"	15.3"	17.2"	29.3"	35.0"

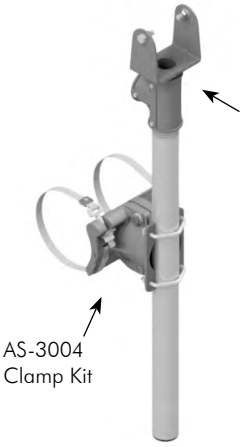

Camera Bracket, 1-Piece Extended Tilt & Pan w/ Service Wire Outlet, Alum Stellar Band Mount

AS-0177 - [1.94" OD Tube Length] - [Band Length] - [Coating]

1.94" OD Tube Length	Band Length	Coating
23=23" Tube 37=37" Tube 46=46" Tube 58=58" Tube 74=74" Tube	See Table	PNC=Process No Color P_ _=Paint

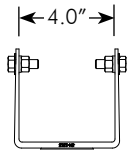

Band Length:	29"	42"	56"	72"	114"
Maximum Pole Dia:	7.3"	11.5"	15.9"	21.0"	34.4"

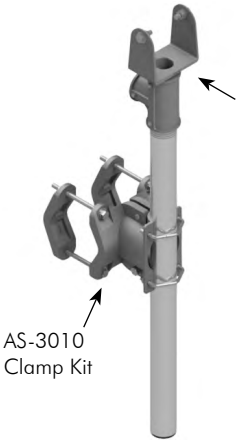

Camera Bracket, 1-Piece Extended Tilt & Pan w/ Service Wire Outlet, Alum Stellar Tenon Mount

AS-0654 - [1.94" OD Tube Length] - [Coating]

1.94" OD Tube Length	Coating
23=23" Tube 37=37" Tube 46=46" Tube 58=58" Tube 74=74" Tube	PNC=Process No Color P_ _=Paint

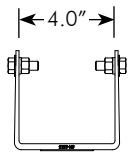

Note:
Fits 1.9" to 4.5" diameter.

Note: 1. All assemblies are supplied standard with stainless steel fasteners.
2. See T7-27-and T7-28 for camera mounting brackets.
3. See Reference Section page v for available paint colors.

Astro-Brac
2-Piece Camera Bracket
Cable Mount

Pelco makes adjustable brackets for cameras, sensors and antennas that can mount a variety of traffic industry devices. Video Detection camera brackets are available for mast arm, post top, span wire or side-of-pole applications.

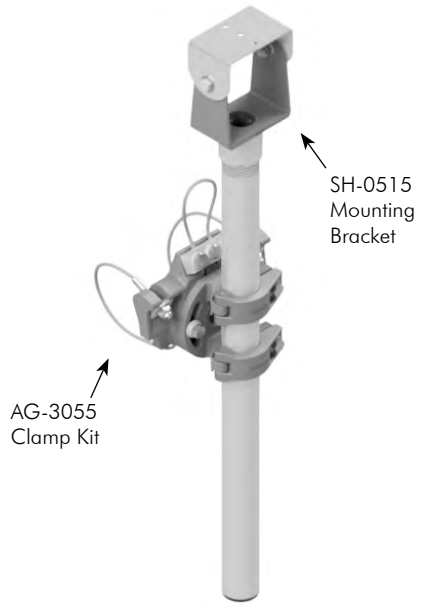

Camera Bracket, 2-Piece Extended Tilt & Pan, Alum Galaxy Cable Mount

AG-0169 - [1.94″ OD Tube Length] - [Cable Length] - [Cable] - [Coating]

1.94″ OD Tube Length: 23=23″ Tube, 37=37″ Tube, 46=46″ Tube, 58=58″ Tube, 74=74″ Tube
Cable Length: See Table
Cable: Blank=Galv, SS=Stainless
Coating: PNC=Process No Color, P_ _=Paint

Cable Length:	62″	84″	96″	110″	120″	132″	144″	220″	280″
Maximum Pole Dia:	7.0″	10.5″	12.4″	14.6″	16.2″	18.2″	20.1″	32.2″	35.0″
Pole Dia w/ Ty-back:	4.5″	7.6″	9.6″	11.8″	13.4″	15.3″	17.2″	29.3″	35.0″

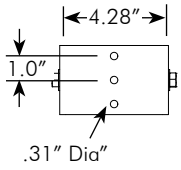

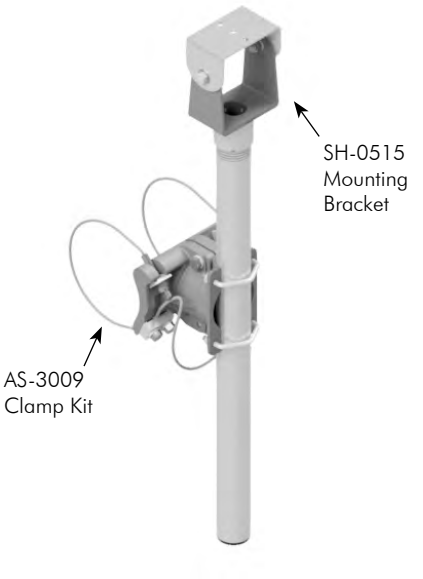

Camera Bracket, 2-Piece Extended Tilt & Pan, Alum Stellar Cable Mount, Alum

AS-0169 - [1.94″ OD Tube Length] - [Cable Length] - [Cable] - [Coating]

1.94″ OD Tube Length: 23=23″ Tube, 37=37″ Tube, 46=46″ Tube, 58=58″ Tube, 74=74″ Tube
Cable Length: SSee Table
Cable: Blank=Galv, SS=Stainless
Coating: PNC=Process No Color, P_ _=Paint

Cable Length:	62″	84″	96″	110″	120″	132″	144″	220″	280″
Maximum Pole Dia:	7.0″	10.5″	12.4″	14.6″	16.2″	18.2″	20.1″	32.2″	35.0″
Pole Dia w/ Ty-back:	4.5″	7.6″	9.6″	11.8″	13.4″	15.3″	17.2″	29.3″	35.0″

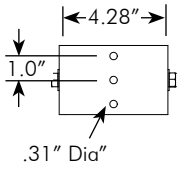

Note: 1. All assemblies are supplied standard with stainless steel fasteners.
2. See T7-27-and T7-28 for camera mounting brackets.
3. See Reference Section page v for available paint colors.

ISO 9001 www.intlcert.com

Astro-Brac 2-Piece Camera Bracket Band and Tenon Mount

Pelco makes adjustable brackets for cameras, sensors and antennas that can mount a variety of traffic industry devices. Video Detection camera brackets are available for mast arm, post top, span wire or side-of-pole applications.

Camera Bracket, 2-Piece Extended Tilt & Pan, Alum Stellar Band Mount

AS-0172 - [1.94″ OD Tube Length] - [Band Length] - [Coating]

1.94″ OD Tube Length:
23=23″ Tube
37=37″ Tube
46=46″ Tube
58=58″ Tube
74=74″ Tube

Band Length: See Table

Coating:
PNC=Process No Color
P_ _=Paint

Band Length:	29″	42″	56″	72″	114″
Maximum Pole Dia:	7.3″	11.5″	15.9″	21.0″	34.4″

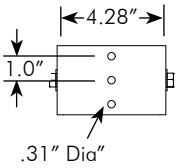

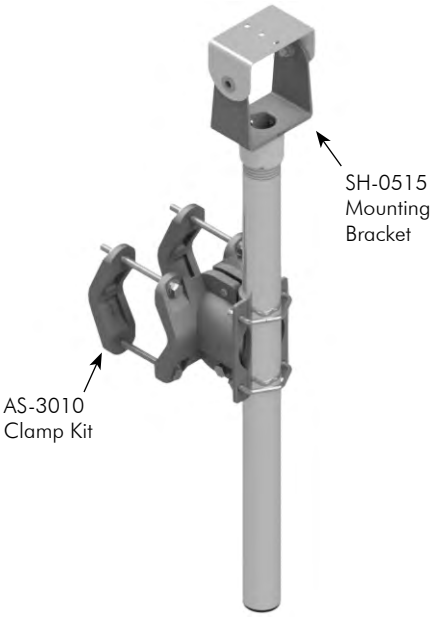

Camera Bracket, 2-Piece Extended Tilt & Pan, Alum Stellar Tenon Mount

AS-0653 - [1.94″ OD Tube Length] - [Coating]

1.94″ OD Tube Length:
23=23″ Tube
37=37″ Tube
46=46″ Tube
58=58″ Tube
74=74″ Tube

Coating:
PNC=Process No Color
P_ _=Paint

Note:
Fits 1.9″ to 4.5″ diameter.

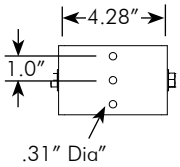

Note: 1. All assemblies are supplied standard with stainless steel fasteners.
2. See T7-27-and T7-28 for camera mounting brackets.
3. See Reference Section page v for available paint colors.

ISO 9001 www.intlcert.com

Astro-Brac
2-Piece Camera Bracket with Service Wire Outlet

Pelco makes adjustable brackets for cameras, sensors and antennas that can mount a variety of traffic industry devices. Video Detection camera brackets are available for mast arm, post top, span wire or side-of-pole applications.

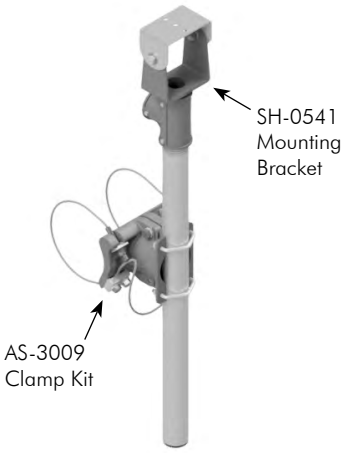

Camera Bracket, 2-Piece Extended Tilt & Pan w/ Service Wire Outlet, Alum Stellar Cable Mount

	1.94″ OD Tube Length		Cable Length		Cable		Coating
AS-0164	- [ ]	-	[ ]	-	[ ]	-	[ ]
	23=23″ Tube 37=37″ Tube 46=46″ Tube 58=58″ Tube 74=74″ Tube		See Table		Blank=Galv SS=Stainless		PNC=Process No Color P_ _=Paint

Cable Length:	62″	84″	96″	110″	120″	132″	144″	220″	280″
Maximum Pole Dia:	7.0″	10.5″	12.4″	14.6″	16.2″	18.2″	20.1″	32.2″	35.0″
Pole Dia w/ Ty-back:	4.5″	7.6″	9.6″	11.8″	13.4″	15.3″	17.2″	29.3″	35.0″

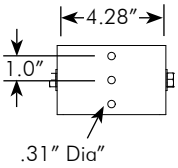

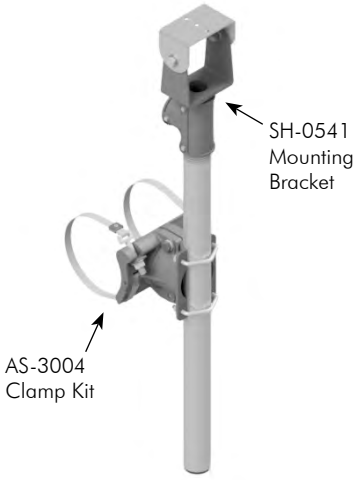

Camera Bracket, 2-Piece Extended Tilt & Pan w/ Service Wire Outlet, Alum Stellar Band Mount

	1.94″ OD Tube Length		Band Length		Coating
AS-0173	- [ ]	-	[ ]	-	[ ]
	23=23″ Tube 37=37″ Tube 46=46″ Tube 58=58″ Tube 74=74″ Tube		See Table		PNC=Process No Color P_ _=Paint

Band Length:	29″	42″	56″	72″	114″
Maximum Pole Dia:	7.3″	11.5″	15.9″	21.0″	34.4″

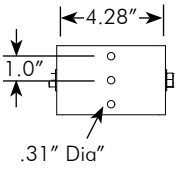

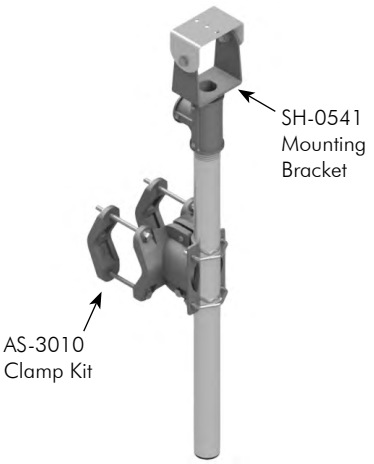

Camera Bracket, 2-Piece Extended Tilt & Pan w/ Service Wire Outlet, Alum Stellar Tenon Mount

	1.94″ OD Tube Length		Coating
AS-0655	- [ ]	-	[ ]
	23=23″ Tube 37=37″ Tube 46=46″ Tube 58=58″ Tube 74=74″ Tube		PNC=Process No Color P_ _=Paint

Note:
Fits 1.9″ to 4.5″ diameter.

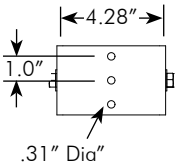

Note: 1. All assemblies are supplied standard with stainless steel fasteners.
2. See T7-27-and T7-28 for camera mounting brackets.
3. See Reference Section page v for available paint colors.

ISO 9001 www.intlcert.com

Astro-Brac 2-Piece Camera Bracket Cable Mount

Pelco makes adjustable brackets for cameras, sensors and antennas that can mount a variety of traffic industry devices. Video Detection camera brackets are available for mast arm, post top, span wire or side-of-pole applications.

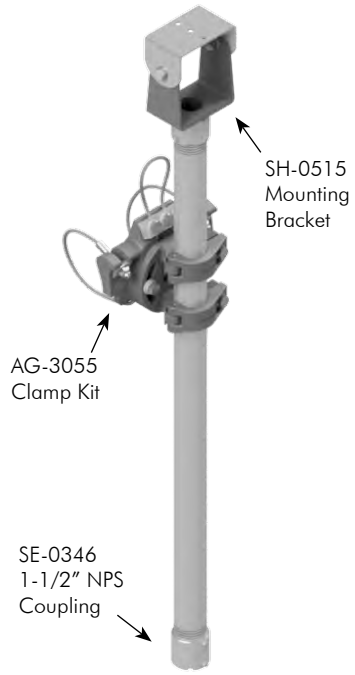

Camera Bracket, Dual, 2-Piece Extended Tilt & Pan, Alum Galaxy Cable Mount

	1.94" OD Tube Length		Cable Length		Cable		Coating
AG-0697 -	[ ]	-	[ ]	-	[ ]	-	[ ]
	23=23" Tube 37=37" Tube 46=46" Tube 58=58" Tube 74=74" Tube		See Table		Blank=Galv SS=Stainless		PNC=Process No Color P_ _=Paint

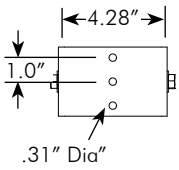

Cable Length:	62"	84"	96"	110"	120"	132"	144"	220"	280"
Maximum Pole Dia:	7.0"	10.5"	12.4"	14.6"	16.2"	18.2"	20.1"	32.2"	35.0"
Pole Dia w/ Ty-back:	4.5"	7.6"	9.6"	11.8"	13.4"	15.3"	17.2"	29.3"	35.0"

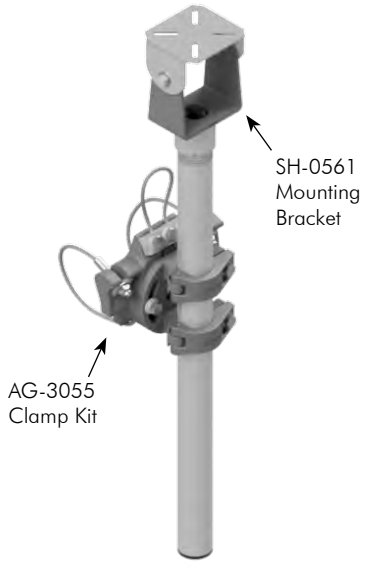

Camera Bracket, Radar, 2-Piece Extended Tilt & Pan, Alum Galaxy Cable Mount

	1.94" OD Tube Length		Cable Length		Cable		Coating
AG-0698 -	[ ]	-	[ ]	-	[ ]	-	[ ]
	23=23" Tube 37=37" Tube 46=46" Tube 58=58" Tube 74=74" Tube		See Table		Blank=Galv SS=Stainless		PNC=Process No Color P_ _=Paint

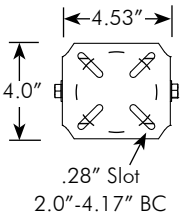

Cable Length:	62"	84"	96"	110"	120"	132"	144"	220"	280"
Maximum Pole Dia:	7.0"	10.5"	12.4"	14.6"	16.2"	18.2"	20.1"	32.2"	35.0"
Pole Dia w/ Ty-back:	4.5"	7.6"	9.6"	11.8"	13.4"	15.3"	17.2"	29.3"	35.0"

Note: 1. All assemblies are supplied standard with stainless steel fasteners.
2. See T7-27-and T7-28 for camera mounting brackets.
3. See Reference Section page v for available paint colors.

This page is intentionally left blank.

PELCO PRODUCTS, INC.

ISO 9001
www.intlcert.com

Astro-Brac 1-Piece Camera Bracket Triton Series

With three bands or cables and a 2-3/8" OD tube the Triton Camera Bracket is an ideal solution for heavier items and higher mountings. A member of the Astro-Brac family, the bracket rotates 360°, has greater strength, and can reach up to a 15' height.

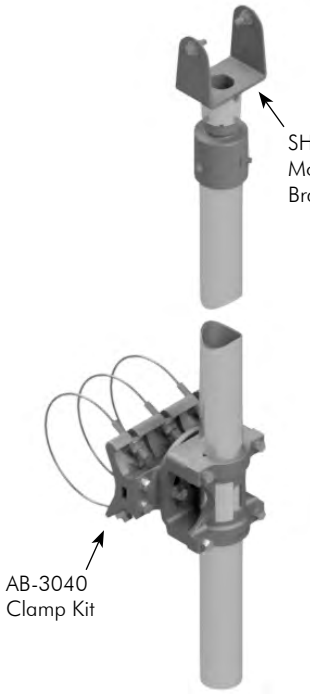

Camera Bracket, 1-Piece Extended Tilt & Pan, Alum Triton Cable Mount

	2.38" OD Tube Length		Cable Length		Cable		Coating
AB-0601	-	☐	-	☐	-	☐	- ☐
	120=10' Tube 144=12' Tube 180=15' Tube		See Table		Blank=Galv SS=Stainless		PNC=Process No Color P_ _=Paint

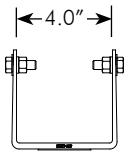

Cable Length:	45"	62"	84"
Maximum Pole Dia:	11.1"	16.6"	22.0"

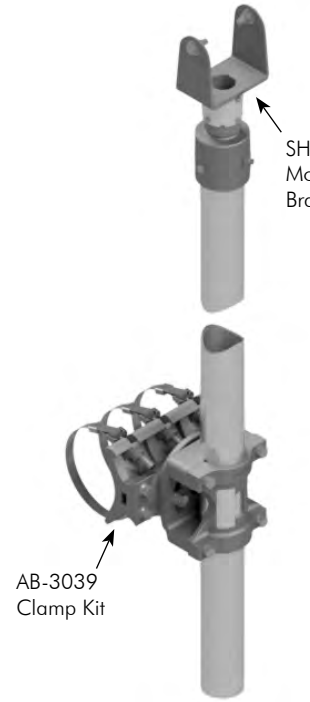

Camera Bracket, 1-Piece Extended Tilt & Pan, Alum Triton Band Mount

	2.38" OD Tube Length		Band Length		Coating
AB-0600	-	☐	-	☐	- ☐
	120=10' Tube 144=12' Tube 180=15' Tube		See Table		PNC=Process No Color P_ _=Paint

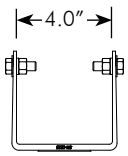

Band Length:	29"	42"	56"	72"
Maximum Pole Dia:	7.3"	11.5"	15.9"	21.0"

Note: 1. All assemblies are supplied standard with stainless steel fasteners.
2. See T7-27-and T7-28 for camera mounting brackets.
3. See Reference Section page v for available paint colors.

Astro-Brac 1-Piece Camera Bracket with Service Wire Outlet Triton Series

With three bands or cables and a 2-3/8" OD tube the Triton Camera Bracket is an ideal solution for heavier items and higher mountings. A member of the Astro-Brac family, the bracket rotates 360°, has greater strength, and can reach up to a 15' height.

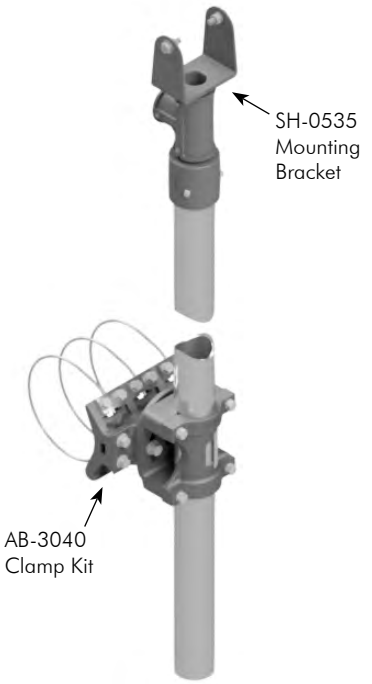

Camera Bracket, 1-Piece Extended Tilt & Pan w/ Service Wire Outlet, Alum Triton Cable Mount

	2.38" OD Tube Length		Cable Length		Cable		Coating
AB-0613	-	☐	-	☐	-	☐	- ☐
		120=10' Tube 144=12' Tube 180=15' Tube		See Table		Blank=Galv SS=Stainless	PNC=Process No Color P_ _=Paint

Cable Length:	45"	62"	84"
Maximum Pole Dia:	11.1"	16.6"	22.0"

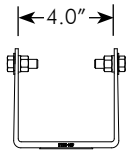

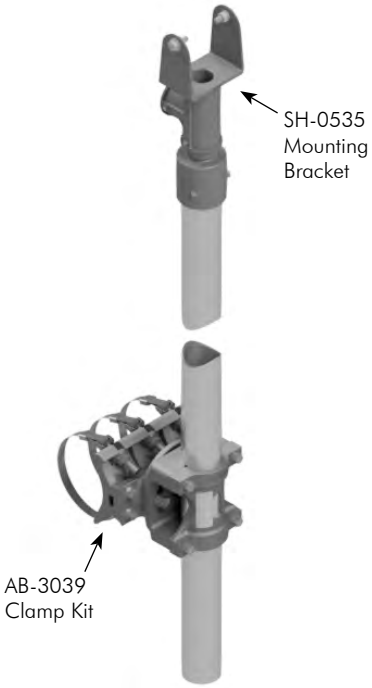

Camera Bracket, 1-Piece Extended Tilt & Pan w/ Service Wire Outlet, Alum Triton Band Mount

	2.38" OD Tube Length		Band Length		Coating
AB-0612	-	☐	-	☐	- ☐
		120=10' Tube 144=12' Tube 180=15' Tube		See Table	PNC=Process No Color P_ _=Paint

Band Length:	29"	42"	56"	72"
Maximum Pole Dia:	7.3"	11.5"	15.9"	21.0"

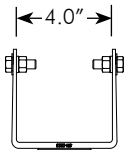

Note: 1. All assemblies are supplied standard with stainless steel fasteners.
2. See T7-27-and T7-28 for camera mounting brackets.
3. See Reference Section page v for available paint colors.

ISO 9001 www.intlcert.com

Astro-Brac 2-Piece Camera Bracket Triton Series

With three bands or cables and a 2-3/8" OD tube the Triton Camera Bracket is an ideal solution for heavier items and higher mountings. A member of the Astro-Brac family, the bracket rotates 360°, has greater strength, and can reach up to a 15' height.

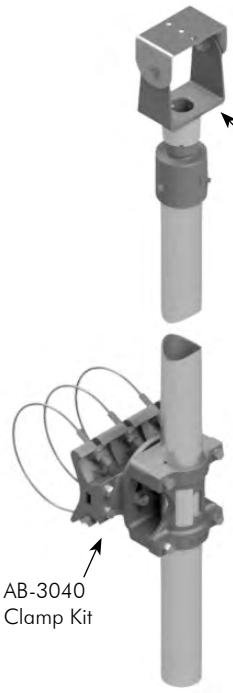

Camera Bracket, 2-Piece Extended Tilt & Pan, Alum Triton Cable Mount

	2.38" OD Tube Length		Cable Length		Cable		Coating
AB-0611	- [ ]	-	[ ]	-	[ ]	-	[ ]
	120=10' Tube 144=12' Tube 180=15' Tube		See Table		Blank=Galv SS=Stainless		PNC=Process No Color P_ _=Paint

Cable Length:	45"	62"	84"
Maximum Pole Dia:	11.1"	16.6"	22.0"

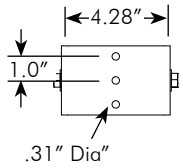

Camera Bracket, 2-Piece Extended Tilt & Pan, Alum Triton Band Mount

	2.38" OD Tube Length		Band Length		Coating
AB-0610	- [ ]	-	[ ]	-	[ ]
	120=10' Tube 144=12' Tube 180=15' Tube		See Table		PNC=Process No Color P_ _=Paint

Band Length:	29"	42"	56"	72"
Maximum Pole Dia:	7.3"	11.5"	15.9"	21.0"

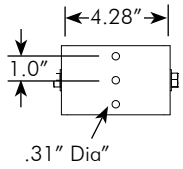

Note: 1. All assemblies are supplied standard with stainless steel fasteners.
2. See T7-27-and T7-28 for camera mounting brackets.
3. See Reference Section page v for available paint colors.

Astro-Brac 2-Piece Camera Bracket with Service Wire Outlet Triton Series

With three bands or cables and a 2-3/8" OD tube the Triton Camera Bracket is an ideal solution for heavier items and higher mountings. A member of the Astro-Brac family, the bracket rotates 360°, has greater strength, and can reach up to a 15' height.

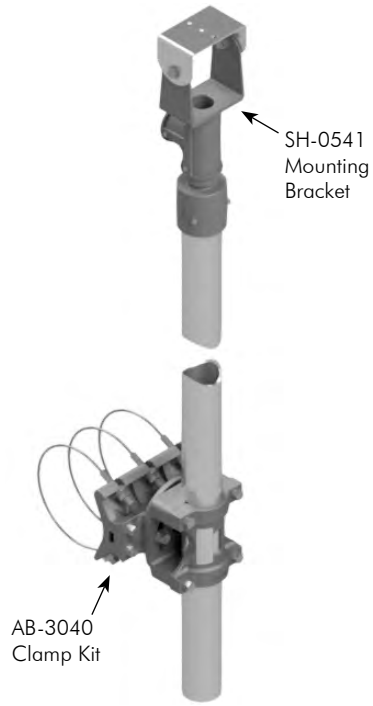

Camera Bracket, 2-Piece Extended Tilt & Pan w/ Service Wire Outlet, Alum Triton Cable Mount

	2.38" OD Tube Length		Cable Length		Cable		Coating
AB-0615	- [ ]	-	[ ]	-	[ ]	-	[ ]
	120=10' Tube 144=12' Tube 180=15' Tube		See Table		Blank=Galv SS=Stainless		PNC=Process No Color P_ _=Paint

Cable Length:	45"	62"	84"
Maximum Pole Dia:	11.1"	16.6"	22.0"

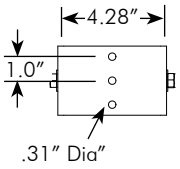

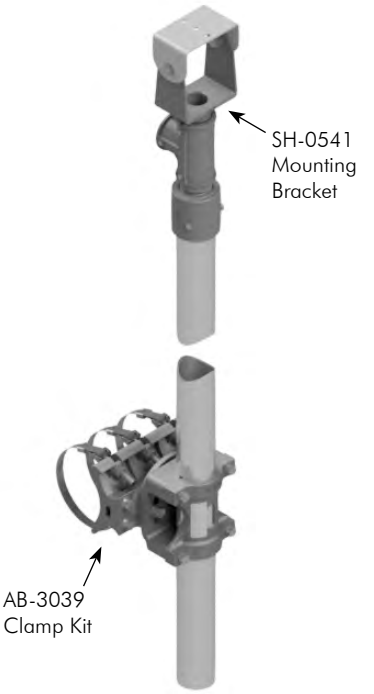

Camera Bracket, 2-Piece Extended Tilt & Pan w/ Service Wire Outlet, Alum Triton Band Mount

	2.38" OD Tube Length		Band Length		Coating
AB-0614	- [ ]	-	[ ]	-	[ ]
	120=10' Tube 144=12' Tube 180=15' Tube		See Table		PNC=Process No Color P_ _=Paint

Band Length:	29"	42"	56"	72"
Maximum Pole Dia:	7.3"	11.5"	15.9"	21.0"

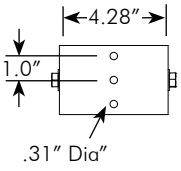

Note: 1. All assemblies are supplied standard with stainless steel fasteners.
2. See T7-27-and T7-28 for camera mounting brackets.
3. See Reference Section page v for available paint colors.

ISO 9001 www.intlcert.com

Astro-Brac Camera Bracket COHU Type

Designed to mount COHU type cameras, the 1-piece or 2-piece brackets have a 4-3/4″ mounting bolt circle. Brackets are available with Pelco's Stellar series clamp kits with a 1-15/16″ OD tube or the more robust Triton series clamp kits with a 2-3/8″ OD tube.

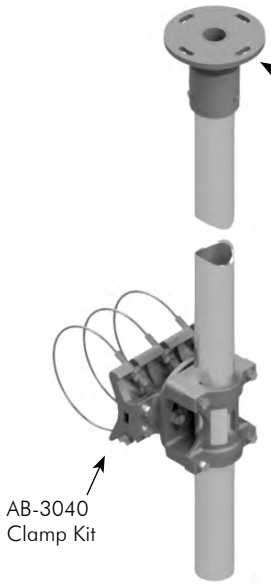

Camera Bracket, COHU Type, Alum Triton Cable Mount

	2.38″ OD Tube Length		Cable Length		Cable		Coating
AB-0628	- [ ]	-	[ ]	-	[ ]	-	[ ]
	120=10′ Tube 144=12′ Tube 180=15′ Tube		See Table		Blank=Galv SS=Stainless		PNC=Process No Color P_ _=Paint

Cable Length:	45″	62″	84″
Maximum Pole Dia:	11.1″	16.6″	22.0″

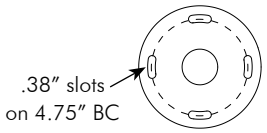

Camera Bracket, COHU Type, Alum Triton Band Mount

	2.38″ OD Tube Length		Band Length		Coating
AB-0627	- [ ]	-	[ ]	-	[ ]
	120=10′ Tube 144=12′ Tube 180=15′ Tube		See Table		PNC=Process No Color P_ _=Paint

Band Length:	29″	42″	56″	72″
Maximum Pole Dia:	7.3″	11.5″	15.9″	21.0″

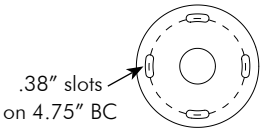

Note: 1. All assemblies are supplied standard with stainless steel fasteners.
2. See T7-27-and T7-28 for camera mounting brackets.
3. See Reference Section page v for available paint colors.

Astro-Brac Camera Bracket COHU Type

Designed to mount COHU type cameras, the 1-piece or 2-piece brackets have a 4-3/4" mounting bolt circle. Brackets are available with Pelco's Stellar series clamp kits with a 1-15/16" OD tube or the more robust Triton series clamp kits with a 2-3/8" OD tube.

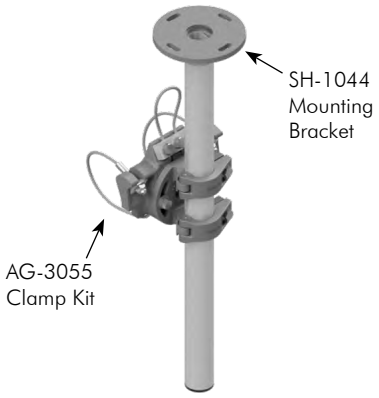

Camera Bracket, COHU Type, Alum Galaxy Cable Mount

	1.94" OD Tube Length		Cable Length		Cable		Coating
AG-0619 -	[ ]	-	[ ]	-	[ ]	-	[ ]
	23=23" Tube 37=37" Tube 46=46" Tube 58=58" Tube 74=74" Tube		See Table		Blank=Galv SS=Stainless		PNC=Process No Color P_ _=Paint

.38" slots on 4.75" BC

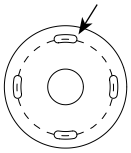

Cable Length:	62"	84"	96"	110"	120"	132"	144"	220"	280"
Maximum Pole Dia:	7.0"	10.5"	12.4"	14.6"	16.2"	18.2"	20.1"	32.2"	35.0"
Pole Dia w/ Ty-back:	4.5"	7.6"	9.6"	11.8"	13.4"	15.3"	17.2"	29.3"	35.0"

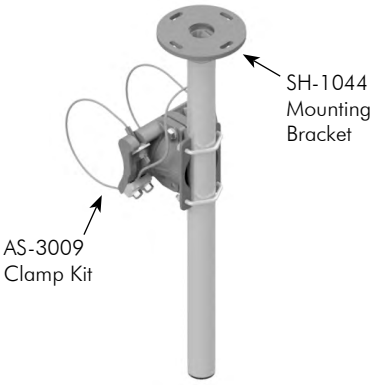

Camera Bracket, COHU Type, Alum Stellar Cable Mount

	1.94" OD Tube Length		Cable Length		Cable		Coating
AS-0619 -	[ ]	-	[ ]	-	[ ]	-	[ ]
	23=23" Tube 37=37" Tube 46=46" Tube 58=58" Tube 74=74" Tube		See Table		Blank=Galv SS=Stainless		PNC=Process No Color P_ _=Paint

.38" slots on 4.75" BC

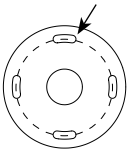

Cable Length:	62"	84"	96"	110"	120"	132"	144"	220"	280"
Maximum Pole Dia:	7.0"	10.5"	12.4"	14.6"	16.2"	18.2"	20.1"	32.2"	35.0"
Pole Dia w/ Ty-back:	4.5"	7.6"	9.6"	11.8"	13.4"	15.3"	17.2"	29.3"	35.0"

Note: 1. All assemblies are supplied standard with stainless steel fasteners.
2. See T7-27-and T7-28 for camera mounting brackets.
3. See Reference Section page v for available paint colors.

Astro-Brac Camera Bracket COHU Type

Designed to mount COHU type cameras, the 1-piece or 2-piece brackets have a 4-3/4″ mounting bolt circle. Brackets are available with Pelco's Stellar series clamp kits with a 1-15/16″ OD tube or the more robust Triton series clamp kits with a 2-3/8″ OD tube.

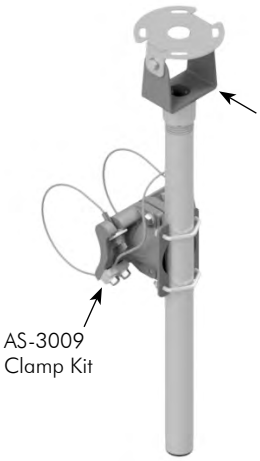

Camera Bracket, 2-Piece COHU Type, Alum Stellar Cable Mount

AS-0682 - [1.94″ OD Tube Length] - [Cable Length] - [Cable] - [Coating]

- 1.94″ OD Tube Length: 23=23″ Tube, 37=37″ Tube, 46=46″ Tube, 58=58″ Tube, 74=74″ Tube
- Cable Length: See Table
- Cable: Blank=Galv, SS=Stainless
- Coating: PNC=Process No Color, P__=Paint

Cable Length:	62″	84″	96″	110″	120″	132″	144″	220″	280″
Maximum Pole Dia:	7.0″	10.5″	12.4″	14.6″	16.2″	18.2″	20.1″	32.2″	35.0″
Pole Dia w/ Ty-back:	4.5″	7.6″	9.6″	11.8″	13.4″	15.3″	17.2″	29.3″	35.0″

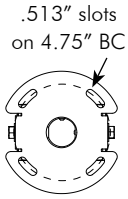

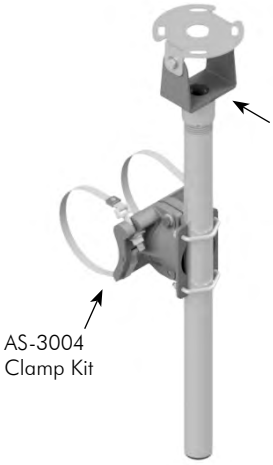

Camera Bracket, 2-Piece COHU Type, Alum Stellar Band Mount

AS-0681 - [1.94″ OD Tube Length] - [Band Length] - [Coating]

- 1.94″ OD Tube Length: 23=23″ Tube, 37=37″ Tube, 46=46″ Tube, 58=58″ Tube, 74=74″ Tube
- Band Length: See Table
- Coating: PNC=Process No Color, P__=Paint

Band Length:	29″	42″	56″	72″	114″
Maximum Pole Dia:	7.3″	11.5″	15.9″	21.0″	34.4″

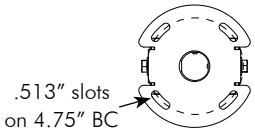

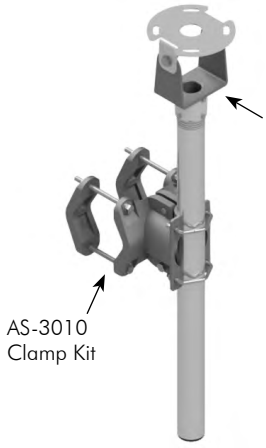

Camera Bracket, 2-Piece COHU Type, Alum Stellar Tenon Mount

AS-0683 - [1.94″ OD Tube Length] - [Coating]

- 1.94″ OD Tube Length: 23=23″ Tube, 37=37″ Tube, 46=46″ Tube, 58=58″ Tube, 74=74″ Tube
- Coating: PNC=Process No Color, P__=Paint

Note:
Fits 1.9″ to 4.5″ diameter.

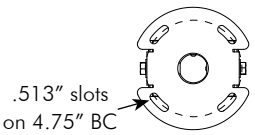

Note: 1. All assemblies are supplied standard with stainless steel fasteners.
2. See T7-27-and T7-28 for camera mounting brackets.
3. See Reference Section page v for available paint colors.

Astro-Brac Camera Bracket COHU Type

Designed to mount COHU type cameras, the 1-piece or 2-piece brackets have a 4-3/4" mounting bolt circle. Brackets are available with Pelco's Stellar series clamp kits with a 1-15/16" OD tube or the more robust Triton series clamp kits with a 2-3/8" OD tube.

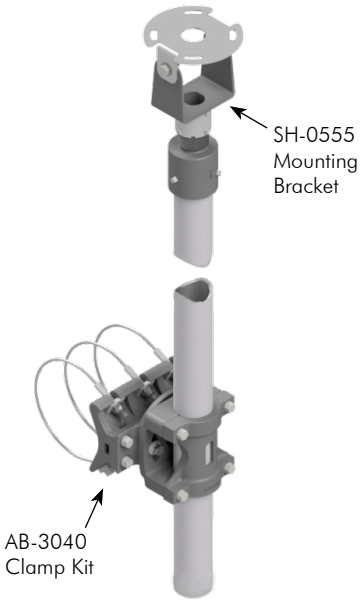

Camera Bracket, 2-Piece COHU Type, Alum Triton Cable Mount

	2.38" OD Tube Length		Cable Length		Cable		Coating
AB-0699	-	[ ]	-	[ ]	-	[ ]	- [ ]
		120=10' Tube 144=12' Tube 180=15' Tube		See Table		Blank=Galv SS=Stainless	PNC=Process No Color P_ _=Paint

Cable Length:	45"	62"	84"
Maximum Pole Dia:	11.1"	16.6"	22.0"

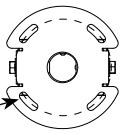

Note: 1. All assemblies are supplied standard with stainless steel fasteners.
2. See T7-27-and T7-28 for camera mounting brackets.
3. See Reference Section page v for available paint colors.

Astro-Brac Camera Bracket Underbraced COHU Type

The underbraced Camera Bracket provides a longer reach than what a single clamp kit can provide. Designed for mounting COHU type cameras this bracket is available with optional extension tube lengths.

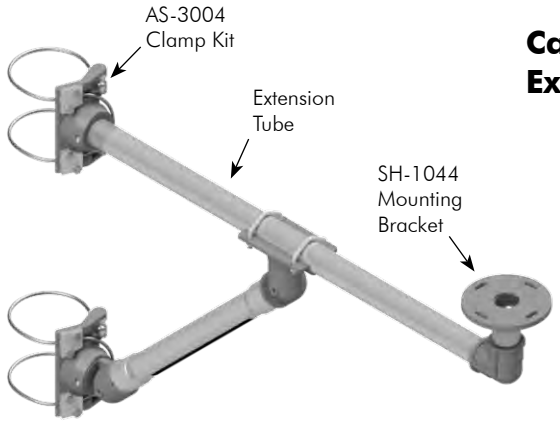

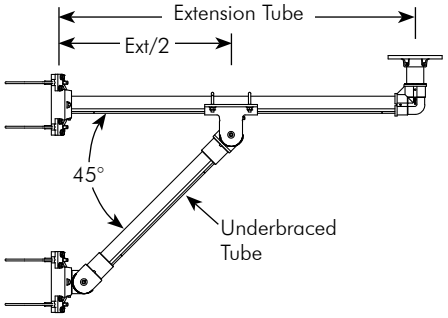

Camera Bracket, COHU Type, Alum Extended Underbraced Cable Mount

	Extension Tube	Underbrace Tube	Cable Length	Cable	Coating
AB-0704 -	[ ]	[ ]	[ ]	[ ]	[ ]
	See Table	See Table	See Cable Table	Blank=Galv SS=Stainless	PNC=Process No Color P_ _=Paint

Extension Tube:	37″	46″	60″	74″
Underbrace Tube:	18″	23″	32″	42″

Cable Length:	62″	84″	96″	110″	120″	132″	144″	220″	280″
Maximum Pole Dia:	7.0″	10.5″	12.4″	14.6″	16.2″	18.2″	20.1″	32.2″	35.0″
Pole Dia w/ Ty-back:	4.5″	7.6″	9.6″	11.8″	13.4″	15.3″	17.2″	29.3″	35.0″

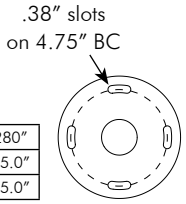

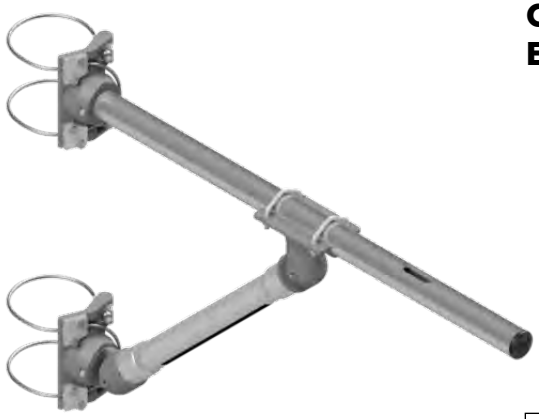

Camera Bracket, Alum Extended Underbraced Cable Mount

	Extension Tube	Underbrace Tube	Cable Length	Cable	Coating
AB-0685 -	[ ]	[ ]	[ ]	[ ]	[ ]
	See Table	See Table	See Cable Table	Blank=Galv SS=Stainless	PNC=Process No Color P_ _=Paint

Extension Tube:	37″	46″	60″	74″
Underbrace Tube:	18″	23″	32″	42″

Cable Length:	62″	84″	96″	110″	120″	132″	144″	220″	280″
Maximum Pole Dia:	7.0″	10.5″	12.4″	14.6″	16.2″	18.2″	20.1″	32.2″	35.0″
Pole Dia w/ Ty-back:	4.5″	7.6″	9.6″	11.8″	13.4″	15.3″	17.2″	29.3″	35.0″

Note:
See SH-0557 for camera mounting bracket.

Note: 1. All assemblies are supplied standard with stainless steel fasteners.
2. See T7-27-and T7-28 for camera mounting brackets.
3. See Reference Section page v for available paint colors.

This page is intentionally left blank.

PELCO PRODUCTS, INC.

ISO 9001
www.intlcert.com

Mast Arm Mount

Pelco makes adjustable brackets for cameras, sensors and antennas that can mount a variety of traffic industry devices. Video Detection camera brackets are available for mast arm, post top, span wire or side-of-pole applications.

Camera Bracket, 1-Piece Tilt & Pan, Alum Mast Arm Mount

SH-0510 - [ ]

Coating

PNC=Process No Color
P_ _=Paint

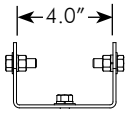

Camera Bracket, 2-Piece Tilt & Pan, Alum Mast Arm Mount

SH-0501 - [ ]

Coating

PNC=Process No Color
P_ _=Paint

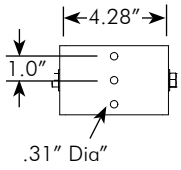

Camera Bracket, 1-Piece Extended Tilt & Pan, Alum Mast Arm Mount

SH-0509 - [ ] - [ ]

Nipple Length

06=6″ Nipple
10=10″ Nipple
11=11″ Nipple
12=12″ Nipple

Coating

PNC=Process No Color
P_ _=Paint

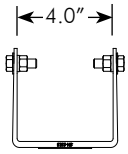

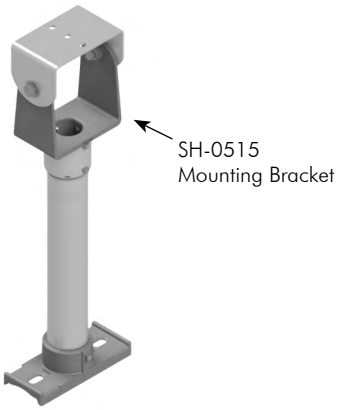

Camera Bracket, 2-Piece Extended Tilt & Pan, Alum Mast Arm Mount

SH-0504 - [ ] - [ ]

Nipple Length

06=6″ Nipple
10=10″ Nipple
11=11″ Nipple
12=12″ Nipple

Coating

PNC=Process No Color
P_ _=Paint

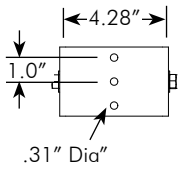

Note: 1. All assemblies are supplied standard with stainless steel fasteners.
2. See T7-27-and T7-28 for camera mounting brackets.
3. See Reference Section page v for available paint colors.

Side-of-Pole Extended Vertical Mount

Pelco makes adjustable brackets for cameras, sensors and antennas that can mount a variety of traffic industry devices. Video Detection camera brackets are available for mast arm, post top, span wire or side-of-pole applications.

Camera Bracket, 1-Piece Extended Tilt & Pan, Alum Vertical Mount

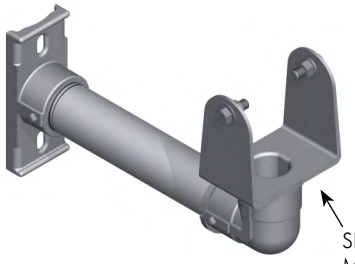

SH-0535
Mounting
Bracket

SH-0527 - [Nipple Length] - [Coating]

Nipple Length:
11=11″ Nipple
12=12″ Nipple
24=24″ Nipple

Coating:
PNC=Process No Color
P_ _=Paint

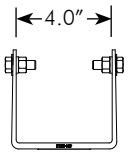

Camera Bracket, 2-Piece Extended Tilt & Pan, Alum Vertical Mount

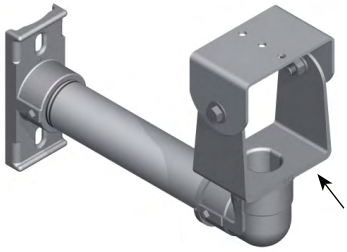

SH-0541
Mounting
Bracket

SH-0503 - [Nipple Length] - [Coating]

Nipple Length:
11=11″ Nipple
12=12″ Nipple
24=24″ Nipple

Coating:
PNC=Process No Color
P_ _=Paint

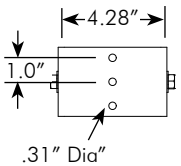

Note: 1. All assemblies are supplied standard with stainless steel fasteners.
2. See T7-27-and T7-28 for camera mounting brackets.
3. See Reference Section page v for available paint colors.

ISO 9001
www.intlcert.com

Post Top Mount

Pelco makes adjustable brackets for cameras, sensors and antennas that can mount a variety of traffic industry devices. Video Detection camera brackets are available for mast arm, post top, span wire or side-of-pole applications.

Camera Bracket, 1-Piece Tilt & Pan, Alum Post Top Mount for 4-1/2" OD Pole

SH-0520 - [ ] Coating

PNC=Process No Color
P_ _=Paint

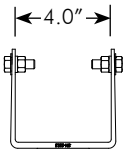

Camera Bracket, 2-Piece Tilt & Pan, Alum Post Top Mount for 4-1/2" OD Pole

SH-0519 - [ ] Coating

PNC=Process No Color
P_ _=Paint

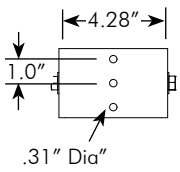

Note: 1. All assemblies are supplied standard with stainless steel fasteners.
2. See T7-27-and T7-28 for camera mounting brackets.
3. See Reference Section page v for available paint colors.

Span Wire Mount

Pelco makes adjustable brackets for cameras, sensors and antennas that can mount a variety of traffic industry devices. Video Detection camera brackets are available for mast arm, post top, span wire or side-of-pole applications.

Camera Bracket, 2-Piece Extended Tilt & Pan w/ Service Wire Outlet, Alum Span Wire Mount

	1.9" OD Tube Length		Stainless Upgrade		Coating
SH-0526 -	[ ]	-	[ ]	-	[ ]
	23=23" Tube 37=37" Tube 46=46" Tube 58=58" Tube 74=74" Tube		Blank=Galv SS=Stainless		PNC=Process No Color P_ _=Paint

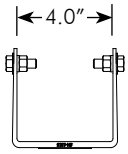

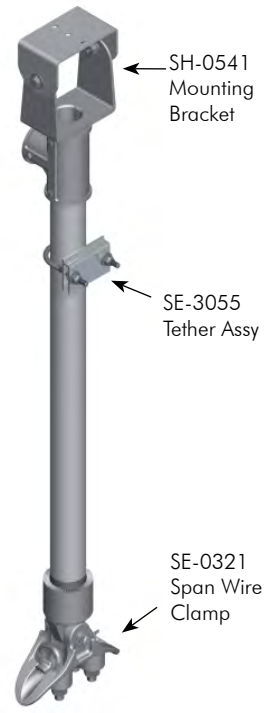

Camera Bracket, 2-Piece Extended Tilt & Pan w/ Service Wire Outlet Span Wire Mount, Alum

	1.9" OD Tube Length		Stainless Upgrade		Coating
SH-0532 -	[ ]	-	[ ]	-	[ ]
	23=23" Tube 37=37" Tube 46=46" Tube 58=58" Tube 74=74" Tube		Blank=Galv SS=Stainless		PNC=Process No Color P_ _=Paint

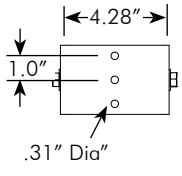

Note: 1. All assemblies are supplied standard with stainless steel fasteners.
2. See T7-27-and T7-28 for camera mounting brackets.
3. See Reference Section page v for available paint colors.

ISO 9001 www.intlcert.com

Orbital Mount

Pelco's Orbital Mount is a versatile and flexible omni-directional mounting assembly. It's ball and socket mechanism provides an infinite degree of solution for a variety of application that require precise aiming and directional adjustability, including wireless antennas, motion detectors, radios, cameras, lights and other sensing devices. An almost endless number of options can be added to enhance the capabilities of these versatile mounting assemblies.

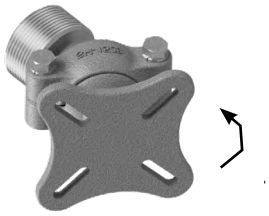

Orbital Ball Mount, 1-1/2" NPS External Threads 2" to 3-1/2" BC, Alum

SH-0556 - [ ]

Coating

PNC=Process No Color
P_ _=Paint

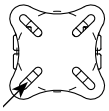

2"-3.5" bolt circle

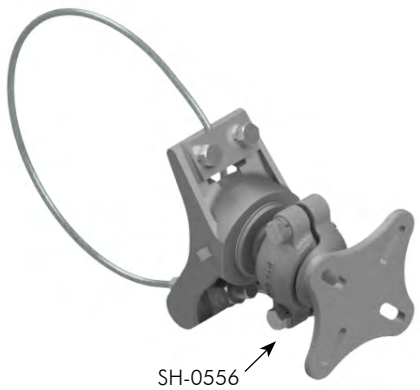

SH-0556
Orbital
Ball Mnt

Bracket Assy, Universal Orbital Mount, Cable Mini-Brac, Alum

SH-0554 - [ ] - [ ] - [ ]

Cable Length: See Table

Cable: Blank=Galv, SS=Stainless

Coating: PNC=Process No Color, P_ _=Paint

Cable Length:	45"	62"	84"
Maximum Pole Dia:	11.1"	16.6"	22.0"

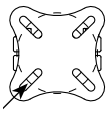

2"-3.5" bolt circle

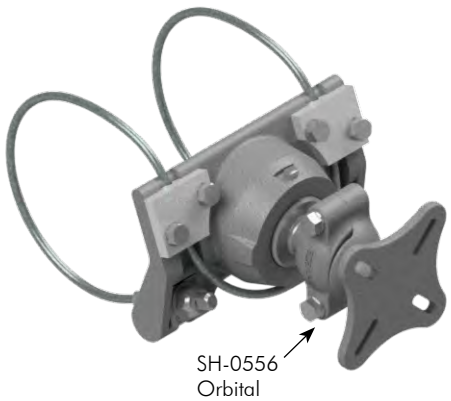

SH-0556
Orbital
Ball Mnt

Bracket Assy, Universal Orbital Mount, Cable Astro-Brac, Alum

SH-0564 - [ ] - [ ] - [ ]

Cable Length: See Table

Cable: Blank=Galv, SS=Stainless

Coating: PNC=Process No Color, P_ _=Paint

2"-3.5" bolt circle

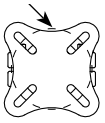

Cable Length:	62"	84"	96"	110"	120"	132"	144"	220"	280"
Maximum Pole Dia:	7.0"	10.5"	12.4"	14.6"	16.2"	18.2"	20.1"	32.2"	35.0"
Pole Dia w/ Ty-back:	4.5"	7.6"	9.6"	11.8"	13.4"	15.3"	17.2"	29.3"	35.0"

Note: 1. All assemblies are supplied standard with stainless steel fasteners.
2. See Reference Section page v for available paint colors.

Orbital Mount

Pelco's Orbital Mount is a versatile and flexible omni-directional mounting assembly. It's ball and socket mechanism provides an infinite degree of solution for a variety of application that require precise aiming and directional adjustability, including wireless antennas, motion detectors, radios, cameras, lights and other sensing devices. An almost endless number of options can be added to enhance the capabilities of these versatile mounting assemblies.

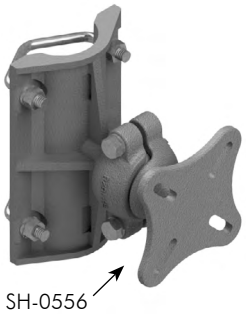

SH-0556
Orbital
Ball Mnt

Bracket Assy, Orbital Mount w/ Tube Saddle, Alum

SH-0553 - [ ] Coating

PNC=Process No Color
P_ _=Paint

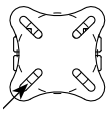

2"-3.5" bolt circle

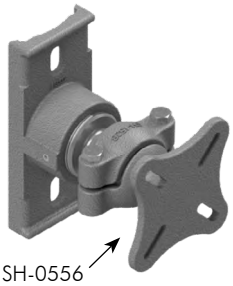

SH-0556
Orbital
Ball Mnt

Bracket Assy, Orbital Mount w/ Universal Hub, Alum

SH-0565 - [ ] Coating

PNC=Process No Color
P_ _=Paint

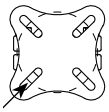

2"-3.5" bolt circle

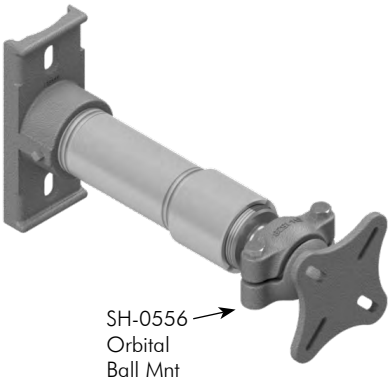

SH-0556
Orbital
Ball Mnt

Bracket Assy, Orbital Mount w/ Universal Hub & 6" Nipple, Alum

SH-0566-06- [ ] Coating

PNC=Process No Color
P_ _=Paint

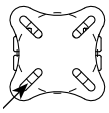

2"-3.5" bolt circle

Note: 1. All assemblies are supplied standard with stainless steel fasteners.
2. See Reference Section page v for available paint colors.

ISO 9001
www.intlcert.com

Astro-Brac Camera Bracket Dome Type

Designed to mount the dome type cameras, these articulating brackets are available with Pelco's Stellar series clamp kits with a 1-15/16" OD bent tube.

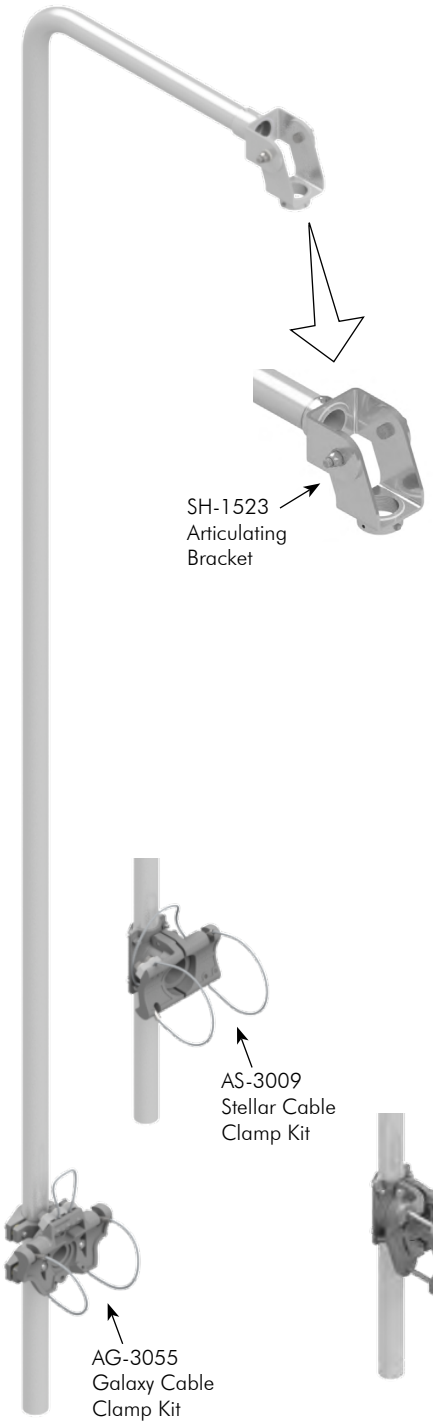

Camera Bracket, Dome Camera Type, Alum 1-1/2" NPS x 120" Sch 40 Alum Bent Tube

w/ Galaxy Cable Mount

AG-0687 - [Tube Length] - [Cable Length] - [Cable] - [Coating]

Tube Length	Cable Length	Cable	Coating
60=60" Tube 96=96" Tube 120=120" Tube	See Table	Blank=Galv SS=Stainless	PNC=Process No Color P_ _=Paint

w/ Stellar Cable Mount

AS-0687 - [Tube Length] - [Cable Length] - [Cable] - [Coating]

Tube Length	Cable Length	Cable	Coating
60=60" Tube 96=96" Tube 120=120" Tube	See Table	Blank=Galv SS=Stainless	PNC=Process No Color P_ _=Paint

Cable Length:	62"	84"	96"	110"	120"	132"	144"	220"	280"
Maximum Pole Dia:	7.0"	10.5"	12.4"	14.6"	16.2"	18.2"	20.1"	32.2"	35.0"
Pole Dia w/ Ty-back:	4.5"	7.6"	9.6"	11.8"	13.4"	15.3"	17.2"	29.3"	35.0"

w/ Stellar Tenon Mount

AS-0686 - [Tube Length] - [Coating]

Tube Length	Coating
60=60" Tube 96=96" Tube 120=120" Tube	PNC=Process No Color P_ _=Paint

Note:
Fits 1.9" to 4.5" diameter.

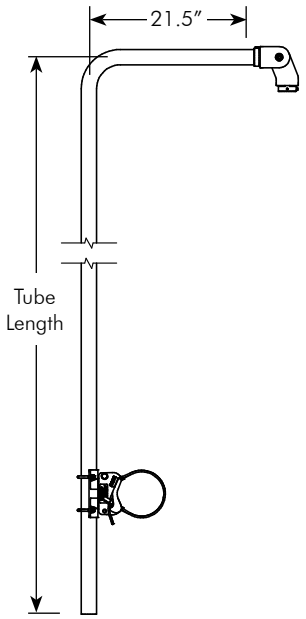

Note: 1. All assemblies are supplied standard with stainless steel fasteners.
2. See T7-27-and T7-28 for camera mounting brackets.
3. See Reference Section page v for available paint colors.

Astro-Brac Camera Bracket Dome Type

Designed to mount the dome type cameras, this articulating bracket is available with Pelco's more robust Triton series clamp kit with a 2-3/8" OD bent tube.

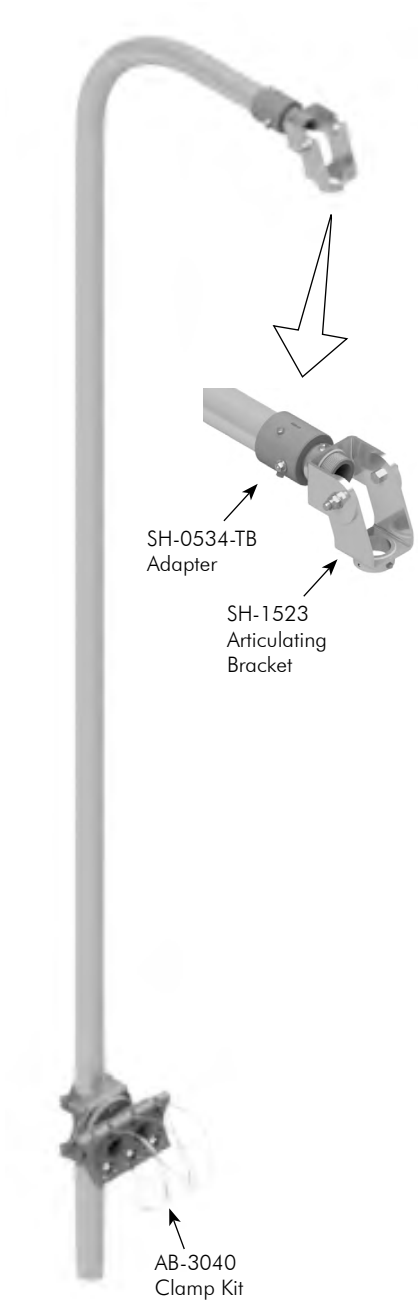

Camera Bracket, Dome Camera Type, Alum
2" NPS x 120" Sch 40 Alum Bent Tube
Triton Cable Mount

AB-0680 - [Cable Length] - [Cable] - [Coating]

Cable Length	Cable	Coating
See Table	Blank=Galv SS=Stainless	PNC=Process No Color P_ _=Paint

Cable Length:	45"	62"	84"
Maximum Pole Dia:	11.1"	16.6"	22.0"

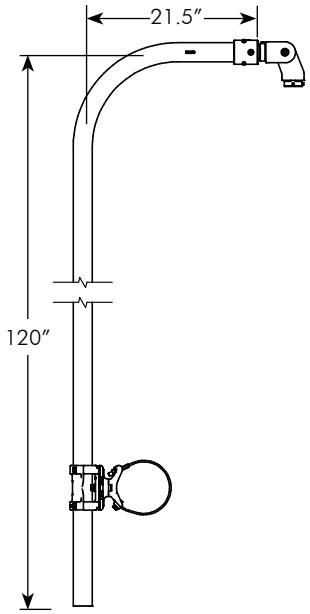

Note: 1. All assemblies are supplied standard with stainless steel fasteners.
2. See T7-27-and T7-28 for camera mounting brackets.
3. See Reference Section page v for available paint colors.

ISO 9001 www.intlcert.com

Camera Bracket

Pelco manufactures 1-piece and 2-piece brackets for various camera styles. Special brackets with mounting holes other than listed below are available upon request.

Camera Bracket, 1-Piece Tilt & Pan, Alum 1-1/2" NPS Internal Threads

SH-0514 - [ ] Coating

PNC=Process No Color
P__=Paint

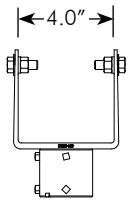

Camera Bracket, 2-Piece Tilt & Pan, Alum 1-1/2" NPS Internal Threads

SH-0515 - [ ] Coating

PNC=Process No Color
P__=Paint

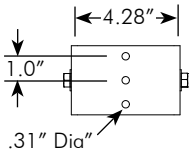

Camera Bracket, 1-Piece Tilt & Pan, Alum 1-1/2" NPS External Threads

SH-0535 - [ ] Coating

PNC=Process No Color
P__=Paint

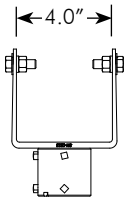

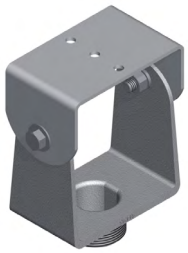

Camera Bracket, 2-Piece Tilt & Pan, Alum 1-1/2" NPS External Threads

SH-0541 - [ ] Coating

PNC=Process No Color
P__=Paint

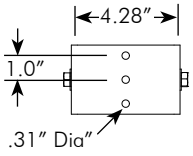

Camera Bracket, 1-Piece Tilt & Pan, Alum 1-1/2" NPS Internal Threads

SH-0537 - [ ] Coating

PNC=Process No Color
P__=Paint

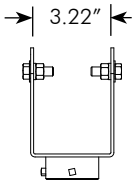

Note: 1. All assemblies are supplied standard with stainless steel fasteners.
2. Special brackets available upon request.
3. See Reference Section page v for available paint colors.

Camera Bracket

Pelco manufactures 1-piece and 2-piece brackets for various camera styles. Special brackets with mounting holes other than listed below are available upon request.

Camera Bracket, Offset Articulating, 1-1/2" NPS, Alum

SH-1523 - [ ] (Coating)

PNC=Process No Color
P_ _=Paint

Camera Bracket, Pole Top 1-1/2" NPS For COHU Camera, Alum

SH-1044 - [ ] (Coating)

PNC=Process No Color
P_ _=Paint

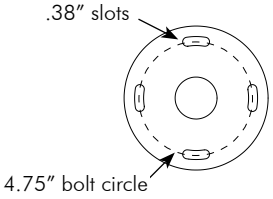

Camera Bracket, Pole Top 2-Piece, 1-1/2" NPS For COHU Camera, Alum

SH-0555 - [ ] (Coating)

PNC=Process No Color
P_ _=Paint

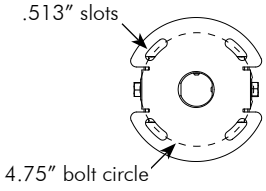

Camera Bracket, Alum For Horizontal or Vertical Tube

SH-0557 - [ ] (Tube Size) - [ ] (Coating)

1.5=1-1/2 (1-7/8" OD
2=2" (2-3/8" OD)

PNC=Process No Color
P_ _=Paint

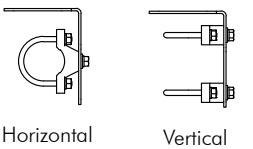

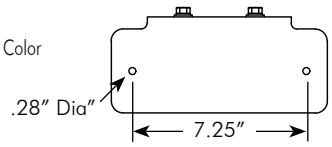

Note: 1. All assemblies are supplied standard with stainless steel fasteners.
2. Special brackets available upon request.
3. See Reference Section page v for available paint colors.

ISO 9001 www.intlcert.com

IntelliCross APS

The IntelliCross APS is the state-of-the-art solution for solving pedestrian traffic challenges. The IntelliCross turns a pre-timed pedestrian intersection into a fully actuated intersection. Pre-loaded or custom audio messages with remote or local configuration access are only two of the many key features of Pelco's intelligent pedestrian system.
Contact Pelco for additional information.

SE-6190
PIM

APS Assy, IntelliCross w/ Single Arrow, for 5" x 7-3/4" Sign, Alum

SE-2900 - [ ] Coating

PNC=Process No Color
P_ _=Paint

APS Assy, IntelliCross w/ Single Arrow, Custom Configured for 5" x 7-3/4" Sign, Alum

SE-2901 - [ ] Buttons per Intersection - [ ] Coating

2=2 Buttons
4=4 Buttons
6=6 Buttons
8=8 Buttons

PNC=Process No Color
P_ _=Paint

Note:
PIM - Power Interface Module included.
Pedestrian signs, sign adapters, and double arrow kits sold separately.

CIU, Communication Interface Unit, Compact for APS IntelliCross Button

SE-6172-PNC

Note:
CUI is optional. Only required for advanced features.

Note: 1. All assemblies are supplied standard with stainless steel fasteners.
2. For pedestrian signs available refer to pages T8-27 through T8-29.
3. See Reference Section page v for available paint colors.

IntelliCross APS

The IntelliCross APS is the state-of-the-art solution for solving pedestrian traffic challenges. The IntelliCross turns a pre-timed pedestrian intersection into a fully actuated intersection. Pre-loaded or custom audio messages with remote or local configuration access are only two of the many key features of Pelco's intelligent pedestrian system.
Contact Pelco for additional information.

Adapter Assy, 9" x 15", w/ Hardware IntelliCross, Alum

SE-2174 - Coating [ ]

PNC=Process No Color
P_ _=Paint

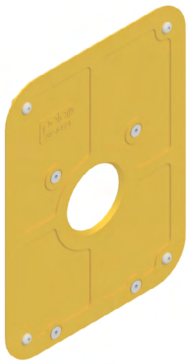

Adapter Assy, 9" x 12", w/ Hardware IntelliCross, Alum

SE-2171 - Coating [ ]

PNC=Process No Color
P_ _=Paint

Adapter Assy, 9" x 3", w/ Hardware IntelliCross, Alum

SE-2175 - Coating [ ]

PNC=Process No Color
P_ _=Paint

Arrow, Double for APS IntelliCross Push Button, w/ Hardware, Alum

SE-6170-2 - Coating [ ]

P_ _=Paint

Note: 1. All assemblies are supplied standard with stainless steel fasteners.
2. See Reference Section page v for available paint colors.

Push Button Extenders

Extenders are available for the IntelliCross and both round and rectangular push buttons. Provided with a service wire hole and optional nipple length they allow for pedestrian push buttons to be mounted an extended distance away from the pole.

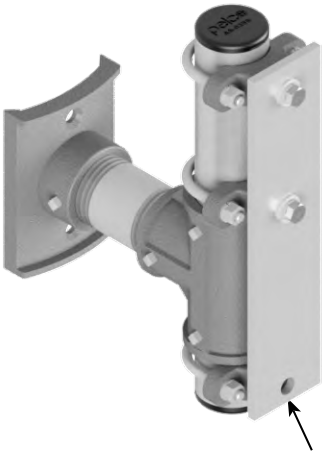

Push Button Extender Assy, IntelliCross w/ Large Pole Hub, Alum

SE-2180 - [Nipple Length] - [Coating]

Nipple Length:
04=4″
06=6″
12=12″
16=16″
24=24″

Coating:
PNC=Process No Color
P_ _=Paint

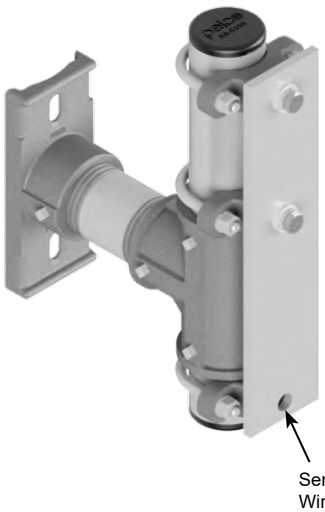

Push Button Extender Assy, IntelliCross w/ Universal Hub, Alum

SE-2186 - [Nipple Length] - [Coating]

Nipple Length:
04=4″
06=6″
12=12″
16=16″
24=24″

Coating:
PNC=Process No Color
P_ _=Paint

Note: 1. All assemblies are supplied standard with stainless steel fasteners.
2. See Reference Section page v for available paint colors.

Push Button Extenders

Extenders are available for the IntelliCross and both round and rectangular push buttons. Provided with a service wire hole and optional nipple length they allow for pedestrian push buttons to be mounted an extended distance away from the pole.

Push Button Extender Assy, Round or Rectangular w/ Large Pole Hub, Alum

SE-2136 - [Nipple Length] - [Coating]

Nipple Length:
04=4″
06=6″
08=8″
10=10″
12=12″
14=18″
20=24″
24=24″

Coating:
PNC=Process No Color
P_ _=Paint

Push Button Extender Assy, Round or Rectangular w/ Universal Hub, Alum

SE-2169 - [Nipple Length] - [Coating]

Nipple Length:
04=4″
06=6″
08=8″
10=10″
12=12″
14=18″
20=24″
24=24″

Coating:
PNC=Process No Color
P_ _=Paint

Note: 1. All assemblies are supplied standard with stainless steel fasteners.
2. See Reference Section page v for available paint colors.

Modular Station Kits

The unique line of modular push button stations provide flexability by adapting various size sign stations to round or oval push button cover assemblies. Stations can be ordered as a complete unit or as modular kits to assemble for variations in sign size and push button covers.

SE-2132-15-PLED-P29 shown.

Modular Push Button Station Assy, 9" x 15"
Piezo Passport w/ LED, Alum, Federal Yellow

5" x 7-3/4"
Modular Kit

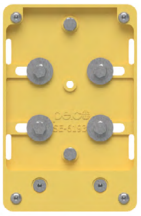

SE-6193 - Coating ☐
PNC=Process No Color
P_ _=Paint

9" x 12"
Modular Kit

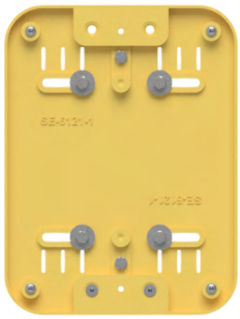

SE-6121 - Coating ☐
PNC=Process No Color
P_ _=Paint

9" x 3"
Modular Kit
(attaches to 9"x12"
for a 9" x 15" sign)

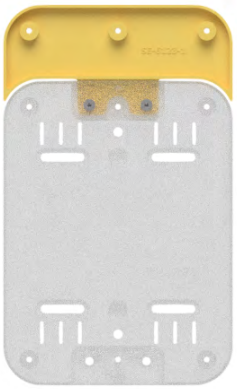

SE-6123 - Coating ☐
PNC=Process No Color
P_ _=Paint

Oval Cover
Adapter Kit

SE-6124 - Coating ☐
PNC=Process No Color
P_ _=Paint

2-Hole Cover
Adapter Kit

SE-6122 - Coating ☐
PNC=Process No Color
P_ _=Paint

4-Hole Cover
Adapter Kit

SE-6189 - Coating ☐
PNC=Process No Color
P_ _=Paint

Oval w/ Directional Arrow
Cover Assy
Piezo or Mechanical

Note: For a complete selection of cover assemblies available see pages T8-12 and T8-19.

Round Cover Assy,
2-Hole Mount
Piezo or Mechanical

Round Cover Assy,
4-Hole Mount
Piezo

Note: 1. All assemblies are supplied standard with stainless steel fasteners.
2. For pedestrian signs available refer to pages T8-27 through T8-29.
3. See Reference Section page v for available paint colors.

Modular Station Assembly
Piezo Switch

These unique Pelco push button stations feature a versatile modular design that provides flexability by adapting different push button cover assemblies, both latching and non-latching, to multiple size sign stations.

SE-2132-7-PLED-P29 shown.

SE-2132-12-PLED-P29 shown.

SE-2132-15-P4HLED-P29 shown.

Modular Push Button Station Assy, Piezo Switch, Alum

SE-2132 - [Size] - [Button] - [Coating]

Size:
- 7=5″ x 7-3/4″
- 12=9″x12″
- 15=9″x15″

Button:
- P=Piezo
- PLED=Piezo w/ LED
- PLED-LCH=Piezo w/ Latching LED
- P4H= Piezo 4-Hole
- P4HLED=Piezo 4-Hole w/ LED
- P4HLED-LCH= Piezo 4-Hole w/ Latching LED

Coating:
- PNC=Process No Color
- P_ _=Paint

Note:
Latching option requires SE-1041 Controller Assy.

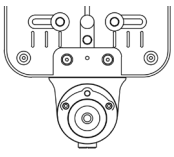

2-Hole Cover

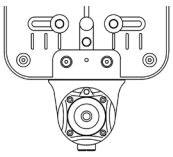

4-Hole Cover

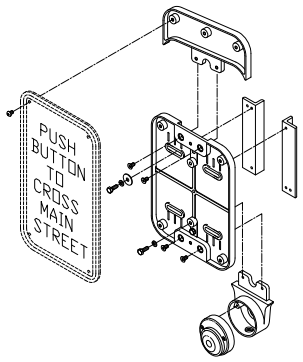

Modular Station
(sign sold seperately)

Note: 1. All assemblies are supplied standard with stainless steel fasteners.
2. Latching units are latched on during the "Don't Walk" cycle with the addition of the SE-1041 controller.
3. For pedestrian signs available refer to pages T8-27 through T8-29.
4. See Reference Section page v for available paint colors.

ISO 9001 www.intlcert.com

Modular Station Assembly Oval w/ Directional Arrow Piezo Switch

These unique Pelco push button stations feature a versatile modular design that provides flexability by adapting different push button cover assemblies, both latching and non-latching, to multiple size sign stations.

SE-2134-7-PLED-1-P29 shown.

Modular Push Button Station Assy, Oval w/ Directional Arrow Piezo Switch, Alum

	Size		Button		Arrow		Coating
SE-2134 -	☐	-	☐	-	☐	-	☐
	7=5" x 7-3/4" 12=9"x12" 15=9"x15"		PLED=Piezo w/ LED PLED-LCH=Piezo w/ Latching LED		1=Single 2=Double		PNC=Process No Color P_ _=Paint

Note:
Latching option requires SE-1041 Controller Assy.

SE-2134-12-PLED-1-P29 shown.

SE-2134-15-PLED-LCH-2-P29 shown.

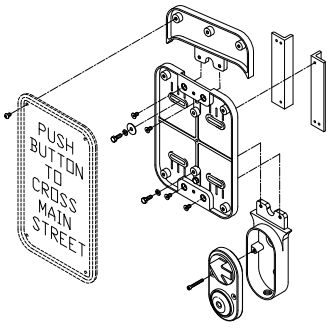

Modular Station
(sign sold seperately)

Note: 1. All assemblies are supplied standard with stainless steel fasteners.
2. Latching units are latched on during the "Don't Walk" cycle with the addition of the SE-1041 controller.
3. For pedestrian signs available refer to pages T8-27 through T8-29.
4. See Reference Section page v for available paint colors.

This page is intentionally left blank.

PELCO PRODUCTS, INC.

ISO 9001
www.intlcert.com

Push Button Assembly, Passport Piezo Switch

The Passport Pedestrian Push Button is Piezo based, utilizing the latest technology. It's durable impact and vandal resistant construction, made of die cast aluminum and stainless steel, is virtually weatherproof. Available in 2-hole or 4-hole mount and with or without LED. Contact Pelco for information on customizing the button with a laser etched logo.

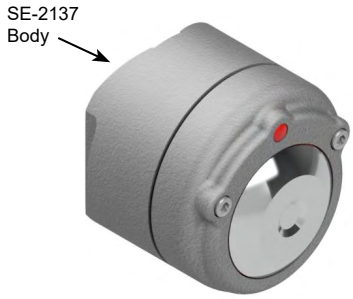

Push Button Assy, Passport Pole Mount, Alum Piezo Switch w/ LED

SE-2120 - [Latching] - [Coating]

Blank=Non-Latching PNC=Process No Color
LCH=Latching P_ _=Paint

Note:
Latching option requires SE-1041 Controller Assy.

Pole Mount

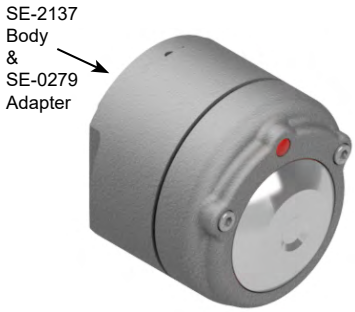

Push Button Assy, Passport Flat Back Mount, Alum Piezo Switch w/ LED

SE-2154 - [Latching] - [Coating]

Blank=Non-Latching PNC=Process No Color
LCH=Latching P_ _=Paint

Note:
Latching option requires SE-1041 Controller Assy.

Flat Back Mount

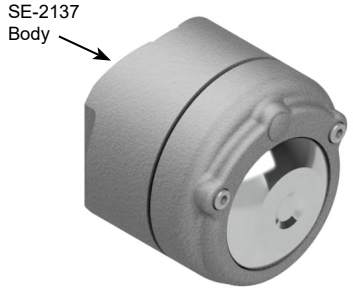

Push Button Assy, Passport Pole Mount, Alum Piezo Switch w/o LED

SE-2165 - [Coating]

PNC=Process No Color
P_ _=Paint

Pole Mount

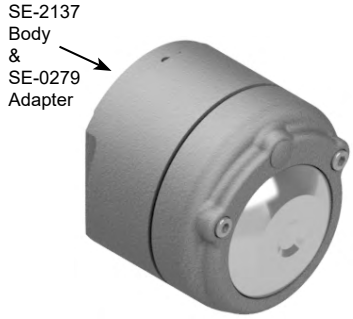

Push Button Assy, Passport Flat Back Mount, Alum Piezo Switch w/o LED

SE-2166 - [Coating]

PNC=Process No Color
P_ _=Paint

Flat Back Mount

Note: 1. All assemblies are supplied standard with stainless steel fasteners.
2. Latching units are latched on during the "Don't Walk" cycle with the addition of the SE-1041 controller.
3. See Reference Section page v for available paint colors.

Push Button Assembly, Passport Piezo Switch

The Passport Pedestrian Push Button is Piezo based, utilizing the latest technology. It's durable impact and vandal resistant construction, made of die cast aluminum and stainless steel, is virtually weatherproof. Available in 2-hole or 4-hole mount and with or without LED. Contact Pelco for information on customizing the button with a laser etched logo.

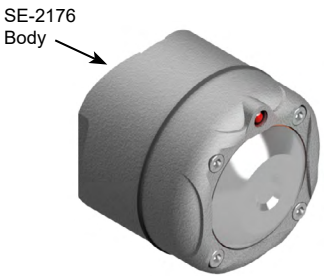

Passport Push Button Assy, Alum Pole Mount, 4-Hole Cover w/ LED

SE-2170 - [Latching] - [Arrow] - [Coating]

Latching: Blank=Non-Latching, LCH=Latching

Arrow: Blank=None, 1=1-Way, 2=2-Way

Coating: PNC=Process No Color, P__=Paint

1-Way Arrow

2-Way Arrow

Pole Mount

Note:
Latching option requires SE-1041 Controller Assy.

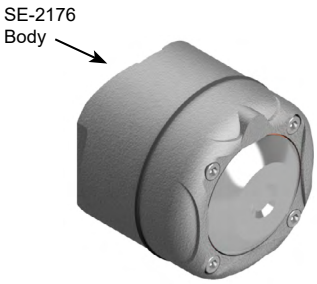

Passport Piezo Push Button Assy, Alum Pole Mount, 4-Hole Cover w/o LED

SE-2178 - [Coating]

Coating: PNC=Process No Color, P__=Paint

Pole Mount

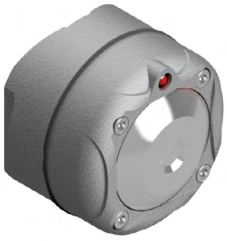

Passport Push Button Assy, Shallow Profile, Alum Pole Mount, 4-Hole Cover w/ LED

SE-2181 - [Latching] - [Arrow] - [Coating]

Latching: Blank=Non-Latching, LCH=Latching

Arrow: Blank=None, 1=1-Way, 2=2-Way

Coating: PNC=Process No Color, P__=Paint

1-Way Arrow

2-Way Arrow

Pole Mount

Note:
Latching option requires SE-1041 Controller Assy.

Passport Piezo Push Button Assy, Alum Pole Mount, Rectangular Cover w/ LED

SE-2183 - [Coating]

Coating: PNC=Process No Color, P__=Paint

Pole Mount

Note: 1. All assemblies are supplied standard with stainless steel fasteners.
2. Latching units are latched on during the "Don't Walk" cycle with the addition of the SE-1041 controller.
3. See Reference Section page v for available paint colors.

ISO 9001 www.intlcert.com

Push Button Assembly
Oval w/ Directional Arrow
Piezo Switch

Pelco's Piezo oval push button with directional arrow is available for round pole or flat back mounting. The oval push button has the option of a single or double adjustable arrow and with or without an LED indicator.

Push Button Assy, Pole Mount, Alum
Oval w/ Directional Arrow
Piezo Switch w/ LED

SE-2162 - [Arrow] - [Latching] - [Coating]

Arrow	Latching	Coating
1=Single Arrow 2=Double Arrow	Blank=Non-Latching LCH=Latching	PNC=Process No Color P_ _=Paint

Note:
Latching option requires SE-1041 Controller Assy.

Pole Mount

Push Button Assy, Flat Back Mount, Alum
Oval w/ Directional Arrow
Piezo Switch w/ LED

SE-2163 - [Arrow] - [Latching] - [Coating]

Arrow	Latching	Coating
1=Single Arrow 2=Double Arrow	Blank=Non-Latching LCH=Latching	PNC=Process No Color P_ _=Paint

Note:
Latching option requires SE-1041 Controller Assy.

Flat Back Mount

Note: 1. All assemblies are supplied standard with stainless steel fasteners.
2. Latching units are latched on during the "Don't Walk" cycle with the addition of the SE-1041 controller.
3. See Reference Section page v for available paint colors.

Cover Assembly
Piezo Switch

The Passport Pedestrian Push Button is Piezo based, utilizing the latest technology. It's durable impact and vandal resistant construction, made of die cast aluminum and stainless steel, is virtually weatherproof. Available in 2-hole or 4-hole mount and with or without LED. Contact Pelco for information on customizing the button with a laser etched logo.

Cover Assy, Passport Piezo Push Button w/ LED

SE-2119 - [Latching] - [Coating]

Latching: Blank=Non-Latching, LCH=Latching

Coating: PNC=Process No Color, P_ _=Paint

Note: Latching option requires SE-1041 Controller Assy.

Cover Assy, Passport Piezo Push Button w/o LED

SE-2164 - [Coating]

PNC=Process No Color
P_ _=Paint

Cover Assy, Passport Piezo Push Button 4-Hole Mount w/ LED

SE-2172 - [Latching] - [Coating]

Latching: Blank=Non-Latching, LCH=Latching

Coating: PNC=Process No Color, P_ _=Paint

Note: Latching option requires SE-1041 Controller Assy.

Cover Assy, Passport Piezo Push Button 4-Hole Mount w/o LED

SE-2179 - [Latching] - [Coating]

Latching: Blank=Non-Latching, LCH=Latching

Coating: PNC=Process No Color, P_ _=Paint

Note: 1. All assemblies are supplied standard with stainless steel fasteners.
2. Latching units are latched on during the "Don't Walk" cycle with the addition of the SE-1041 controller.
3. See Reference Section page v for available paint colors.

Cover Assembly
Piezo Switch

The Passport Pedestrian Push Button is Piezo based, utilizing the latest technology. It's durable impact and vandal resistant construction, made of die cast aluminum and stainless steel, is virtually weatherproof. Rectanglular is availble with or without LED. Contact Pelco for information on customizing the button with a laser etched logo.

Cover Assy, Passport Piezo Push Button Rectangular w/ LED

SE-2182 - [ ] - [ ]

Latching: Blank=Non-Latching, LCH=Latching

Coating: PNC=Process No Color, P_ _=Paint

Note: Latching option requires SE-1041 Controller Assy.

Cover Assy, Passport Piezo Push Button Rectangular w/o LED

SE-2185 - [ ]

Coating: PNC=Process No Color, P_ _=Paint

Cover Assy, Oval Piezo Push Button w/ Directional Arrow & LED

SE-2161 - [ ] [ ] [ ]

Arrow: 1=Single Arrow, 2=Double Arrow

Latching: Blank=Non-Latching, LCH=Latching

Coating: PNC=Process No Color, P_ _=Paint

Note:
Latching option requires SE-1041 Controller Assy.

Note: 1. All assemblies are supplied standard with stainless steel fasteners.
2. Latching units are latched on during the "Don't Walk" cycle with the addition of the SE-1041 controller.
3. See Reference Section page v for available paint colors.

This page is intentionally left blank.

PELCO PRODUCTS, INC.

ISO 9001
www.intlcert.com

Modular Station Assembly
Mechanical Switch

These unique Pelco push button stations feature a versatile modular design that provides flexability by adapting different push button cover assemblies, both latching and non-latching, to multiple size sign stations.

SE-2132-7-M-P29 shown.

SE-2132-12-M-P29 shown.

SE-2132-15-MLED-LCH-P29 shown.

Modular Push Button Station Assy, Mechanical Switch, Alum

SE-2132 - Size ☐ - Button ☐ - Coating ☐

Size:
7=5″ x 7-3/4″
12=9″x12″
15=9″x15″

Button:
M=Mechanical
MLED-LCH= Mech w/ Latching LED

Coating:
PNC=Process No Color
P_ _=Paint

Note:
Latching option requires SE-1041 Controller Assy.

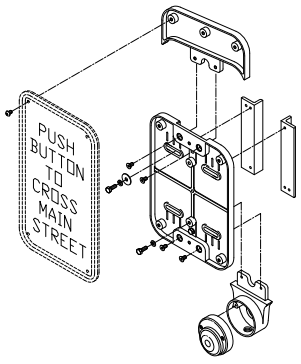

9″ x 15″ Modular Station shown
(sign sold seperately)

Note: 1. All assemblies are supplied standard with stainless steel fasteners.
2. Latching units are latched on during the "Don't Walk" cycle with the addition of the SE-1041 controller.
3. For pedestrian signs available refer to pages T8-27 through T8-29.
4. See Reference Section page v for available paint colors.

Modular Station Assembly Oval w/ Directional Arrow Mechanical Switch

These unique Pelco push button stations feature a versatile modular design that provides flexability by adapting different push button cover assemblies, both latching and non-latching, to multiple size sign stations.

SE-2134-7-M-1-P29 shown.

Modular Push Button Station Assy, Oval w/ Directional Arrow Mechanical Switch, Alum

	Size		Button		Arrow		Coating
SE-2134 -	[ ]	-	[ ]	-	[ ]	-	[ ]
	7=5″ x 7-3/4″ 12=9″x12″ 15=9″x15″		M=Mechanical MLED-LCH= Mech w/ Latching LED		1=Single 2=Double		PNC=Process No Color P_ _=Paint

Note:
Latching option requires SE-1041 Controller Assy.

SE-2134-12-MLED-LCH-1-P29 shown.

SE-2134-15-MLED-LCH-2-P29 shown.

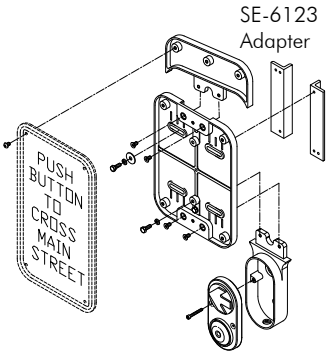

9″ x 15″ Modular Station shown
(sign sold seperately)

Note: 1. All assemblies are supplied standard with stainless steel fasteners.
2. Latching units are latched on during the "Don't Walk" cycle with the addition of the SE-1041 controller.
3. For pedestrian signs available refer to pages T8-27 through T8-29.
4. See Reference Section page v for available paint colors.

ISO 9001 www.intlcert.com

Push Button Assembly
Mechanical Switch

Pelco has a full line of ADA compliant pedestrian push buttons and stations, mechanical and Piezo, that are available with or without LED indicators. Contact Pelco for information on additional push button assemblies not shown in the catalog.

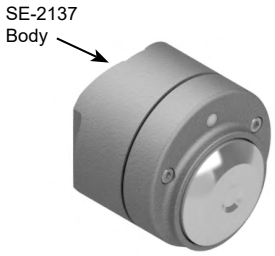

Round Push Button Assy, Pole Mount, Alum Mechanical Switch

SE-2005 - [Button] - [Coating]

Button: M=Mechanical, MLED-LCH= Mech w/ Latching LED

Coating: PNC=Process No Color, P_ _=Paint

Pole Mount

Note:
Latching option requires SE-104 Controller Assy.

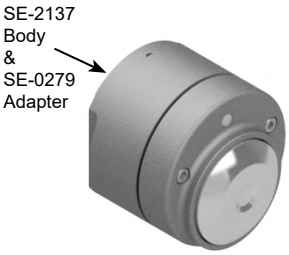

Round Push Button Assy, Flat Back, Alum Mechanical Switch

SE-2006 - [Button] - [Coating]

Button: M=Mechanical, MLED-LCH= Mech w/ Latching LED

Coating: PNC=Process No Color, P_ _=Paint

Flat Back Mount

Note:
Latching option requires SE-1041Controller Assy.

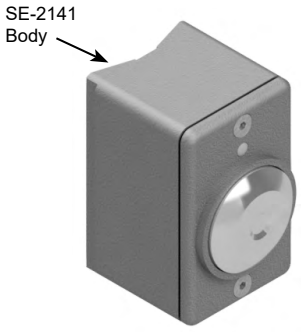

Rectangular Push Button Assy, Pole Mount, Alum Mechanical Switch

SE-2000 - [Button] - [Coating]

Button: M=Mechanical, MLED-LCH= Mech w/ Latching LED

Coating: PNC=Process No Color, P_ _=Paint

Pole Mount

Note:
Latching option requires SE-1041Controller Assy.

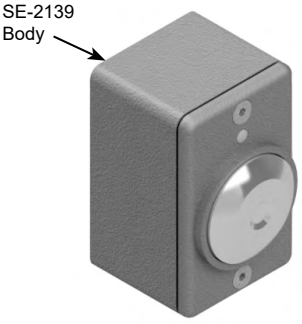

Rectangular Push Button Assy, Flat Back, Alum Mechanical Switch

SE-2001 - [Button] - [Coating]

Button: M=Mechanical, MLED-LCH= Mech w/ Latching LED

Coating: PNC=Process No Color, P_ _=Paint

Flat Back Mount

Note:
Latching option requires SE-1041Controller Assy.

Note: 1. All assemblies are supplied standard with stainless steel fasteners.
2. Latching units are latched on during the "Don't Walk" cycle with the addition of the SE-1041 controller.
3. See Reference Section page v for available paint colors.

ADA w/ Directional Arrow Mechanical Switch

Pelco has a full line of ADA compliant pedestrian push buttons and stations, mechanical and Piezo, that are available with or without LED indicators. Contact Pelco for information on additional push button assemblies not shown in the catalog.

Push Button Assy, Pole Mount, Alum Oval w/ Directional Arrow Mechanical Switch

SE-2039 - Button [ ] - Arrow [ ] - Coating [ ]

Button	Arrow	Coating
M=Mechanical MLED-LCH= Mech w/ Latching LED	1=Single Arrow 2=Double Arrow	PNC=Process No Color P_ _=Paint

Pole Mount

Note:
Latching option requires SE-1041 Controller Assy.

Push Button Assy, Flat Back Mount, Alum Oval w/ Directional Arrow Mechanical Switch

SE-2040 - Button [ ] - Arrow [ ] - Coating [ ]

Button	Arrow	Coating
M=Mechanical MLED-LCH= Mech w/ Latching LED	1=Single Arrow 2=Double Arrow	PNC=Process No Color P_ _=Paint

Flat Back Mount

Note:
Latching option requires SE-1041 Controller Assy.

Note: 1. All assemblies are supplied standard with stainless steel fasteners.
2. Latching units are latched on during the "Don't Walk" cycle with the addition of the SE-1041 controller.
3. See Reference Section page v for available paint colors.

Push Button Cover Mechanical Switch

Pelco has a full line of ADA compliant pedestrian push buttons and stations, mechanical and Piezo, that are available with or without LED indicators. Contact Pelco for information on additional push button assemblies not shown in the catalog.

Cover Assy, Round Push Button Mechanical

SE-2009 - M - ☐

Button: M
Coating: ☐ PNC=Process No Color, P_ _=Paint

Cover Assy, Round Push Button Mechanical, Latching LED

SE-2009 - MLED - LCH - ☐

Button: MLED
Latching: LCH
Coating: ☐ PNC=Process No Color, P_ _=Paint

Note:
Requires SE-1041 Controller Assy.

Cover Assy, Rectangular Push Button Mechanical

SE-2015 - M - ☐

Button: M
Coating: ☐ PNC=Process No Color, P_ _=Paint

Cover Assy, Rectangular Push Button Mechanical, Latching LED

SE-2015 - MLED - LCH - ☐

Button: MLED
Latching: LCH
Coating: ☐ PNC=Process No Color, P_ _=Paint

Note:
Requires SE-1041 Controller Assy.

Cover Assy, Oval Push Button Mechanical w/ Directional Arrow

SE-2048 - ☐ - ☐ - ☐

Button: ☐ M=Mechanical, MLED-LCH= Mech w/ Latching LED
Arrow: ☐ 1=Single Arrow, 2=Double Arrow
Coating: ☐ PNC=Process No Color, P_ _=Paint

Note:
Latching option requires SE-1041 Controller Assy.

Note: 1. All assemblies are supplied standard with stainless steel fasteners.
2. Latching units are latched on during the "Don't Walk" cycle with the addition of the SE-1041 controller.
3. See Reference Section page v for available paint colors.

5" x 7-3/4" Station Mechanical Switch

Pelco's fixed pedestrian stations are available with attachable signs or cast legends. A wide variety of pedestrian signs, including Braille, are available in various sizes.

Push Button Station Assy, Rectangular 5" x 7-3/4" Blank Face, Alum Mechanical Switch

SE-2037 - M - [ ]

Button: M = Mechanical

Coating: PNC=Process No Color; P_ _=Paint

Top View

Push Button Station Assy, Rectangular 5" x 7-3/4" Cast Legend, Alum Mechanical Switch

SE-2038 - [ ] - M - [ ] - [ ]

Sign Face: 1030, 1031, 1032, 1039, *See Below

Button: M = Mechanical

Legend Color: 106=Black Ink, 107=White Ink, 110=Silver Ink

Coating: PNC=Process No Color; P_ _=Paint

Top View

Push Button Station Assy, 9" x 12" Cast Legend, Alum Mechanical Switch

SE-2089 - [ ] - M - [ ] - [ ]

Sign Face: 1030, 1031, 1032, 1039, *See Below

Button: M = Mechanical

Legend Color: 106=Black Ink, 107=White Ink, 110=Silver Ink

Coating: PNC=Process No Color; P_ _=Paint

Legend (Ink)	Body (Paint)	Color Combination
-106	-PNC	Black on Natural
-106	-PXX	Black on Paint
-107	-PXX	Silver on Paint
-110	-PXX	Silver on Paint

*Cast Sign Face Options:

1030

Left Man/Left Arrow

1031

Right Man/Right Arrow

1032

Right Man/Double Arrow

1039

Instruction

Top View

Note: 1. All assemblies are supplied standard with stainless steel fasteners.
2. For pedestrian signs available refer to pages T8-27 through T8-29.
3. See Reference Section page v for available paint colors.

ISO 9001 www.intlcert.com

Modular Station Body

These unique Pelco push button stations feature a versatile modular design that provides flexability by adapting different push button cover assemblies to multiple size sign stations. The 9″ x 12″ station can easily be converted to 9″ x 15″ station by adding a 3″ x 12″ adapter kit.

SE-2142 - Size [ ] - Coating [ ]

Size: 7=5″ x 7-3/4″, 12=9″x12″, 15=9″x15″

Coating: PNC=Process No Color, P_ _=Paint

Modular Sign Station Body Assy, Alum For Round 2-Hole Push Buttons

SE-2142-7-P33

SE-2142-12-P33

SE-2142-15-P33

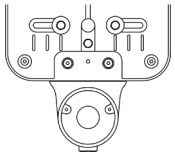

2-Hole Cover

SE-2147 - Size [ ] - Coating [ ]

Size: 7=5″ x 7-3/4″, 12=9″x12″, 15=9″x15″

Coating: PNC=Process No Color, P_ _=Paint

Modular Sign Station Body Assy, Alum For Round 4-Hole Push Button

SE-2147-7-P33

SE-2147-12-P33

SE-2147-15-P33

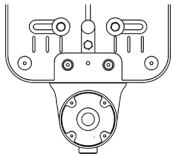

4-Hole Cover

Note: 1. All assemblies are supplied standard with stainless steel fasteners.
2. For pedestrian signs available refer to pages T8-27 through T8-29.
3. See Reference Section page v for available paint colors.

Modular Station Body

These unique Pelco push button stations feature a versatile modular design that provides flexability by adapting different push button cover assemblies to multiple size sign stations. The 9″ x 12″ station can easily be converted to 9″ x 15″ station by adding a 3″ x 12″ adapter kit.

SE-2144 - Size ☐ - Coating ☐

Size: 7=5″ x 7-3/4″, 12=9″x12″, 15=9″x15″

Coating: PNC=Process No Color, P_ _=Paint

Modular Sign Station Body Assy, Alum
For Oval Push Buttons w/ Directional Arrows

SE-2144-7-P33

SE-2144-12-P33

SE-2144-15-P33

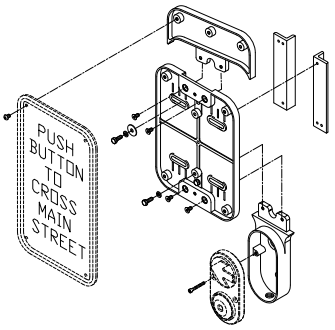

9″ x 15″ Modular Station shown
(sign and cover sold seperately)

Note: 1. All assemblies are supplied standard with stainless steel fasteners.
2. For pedestrian signs available refer to pages T8-27 through T8-29.
3. See Reference Section page v for available paint colors.

ISO 9001 www.intlcert.com

9" x 12" Station Adapter

Pelco's station adapter is for use with 9"x12" stations where there is a need for mounting stations at 90° from each other on a small diameter pole. Available for the round or oval push button stations.

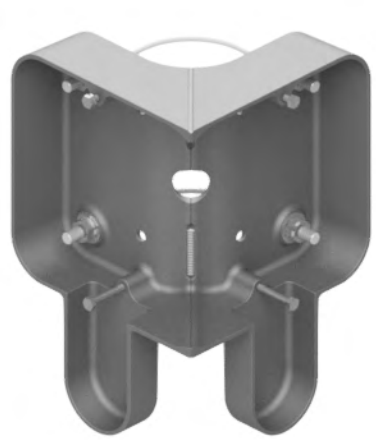

Adapter, Double Push Button Station, 9" x 12" for Round Push Button & 4-1/2" OD Pole, Alum

SE-6042 - [ ] - [ ]

Mount: Blank=Bolt Mount, CM=Cable Mount

Coating: PNC=Process No Color, P__=Paint

Note:
For station assemblies with round push button.

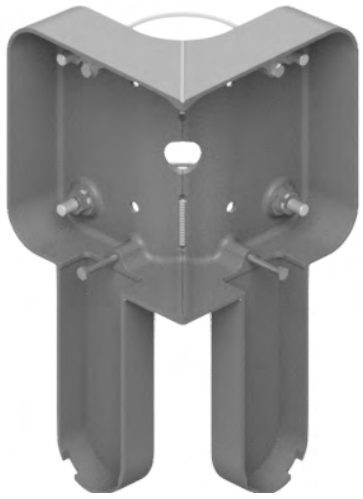

Adapter, Double Push Button Station, 9" x 12" for Oval Push Button & 4-1/2" OD Pole, Alum

SE-6109 - [ ] - [ ]

Mount: Blank=Bolt Mount, CM=Cable Mount

Coating: PNC=Process No Color, P__=Paint

Note:
For station assemblies with oval push button.

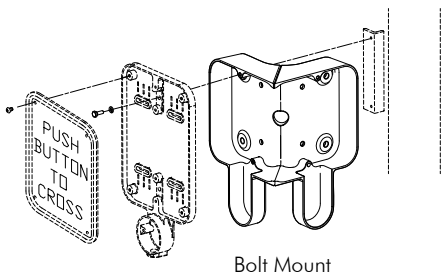

Bolt Mount

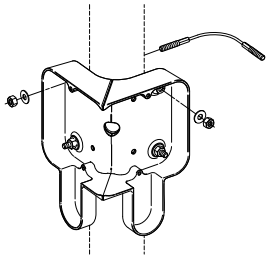

Cable Mount

Note: 1. All assemblies are supplied standard with stainless steel fasteners.
2. For pedestrian signs available refer to pages T8-27 through T8-29.
3. See Reference Section page v for available paint colors.

ISO 9001 www.intlcert.com

This page is intentionally left blank.

PELCO PRODUCTS, INC.
ISO 9001
www.intlcert.com

Latching Controller Assembly

The Pelco Latching Push Button Assembly provides visual confirmation to the pedestrian that a pedestrian call has been placed. An LED located on the Pedestrian Push Button illuminates when pressed, and stays illuminated until the "Walk Signal" is energized by the Traffic Controller. The Latching Push Button Controller also provides electrical isolation between the Push Buttons and Controller.

SE-1041-PNC **Controller Assy, Latching Pushbutton, Alum**

Note: Max 4 Push Buttons per Channel
Each push button channel requires two separate wires.
Common wire can not be shared between channels.

When used with Pelco's latching LED push buttons, and a pedestrian pushes a push button during the don't walk interval, the LED on all push buttons wired to that channel will come on, providing a continuous confirmation that a call has been placed to the traffic signal controller. When the walk signal comes on, the LED indication on all push buttons hooked up to that particular channel will go off.

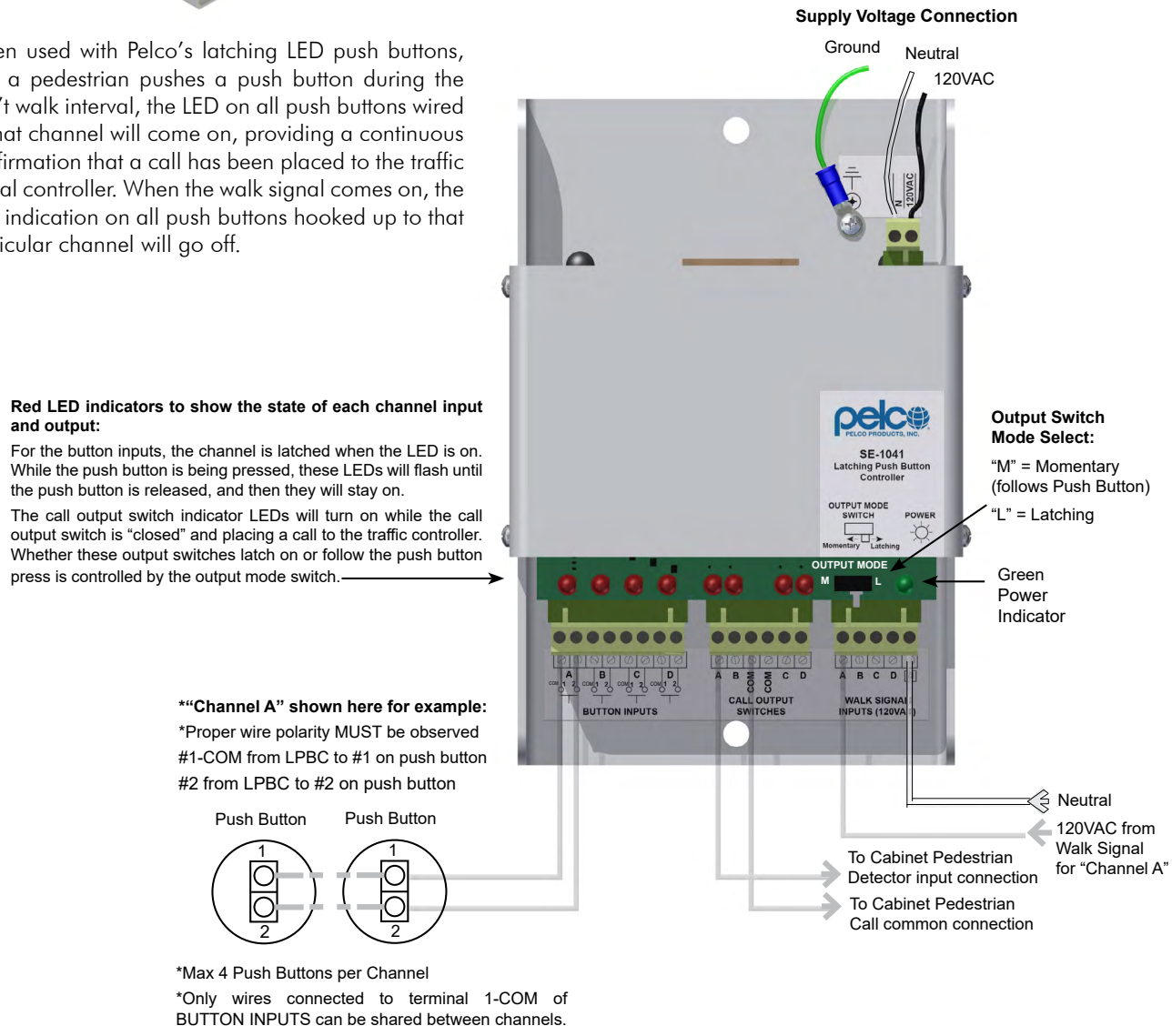

Note: 1. Refer to previous pages of this catalog section for LED push buttons or stations -LCH latching option.
2. Each channel of the 4 channel latching controller can operate up to 4 push buttons for a total of 16 push buttons per controller Assembly.

Push Button Components

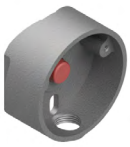

Body Assy, Round Pole Mount, 2-Hole, Alum

SE-2137 - [ ] Coating

PNC=Process No Color
P_ _=Paint

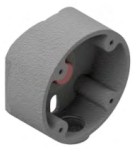

Body Assy, Round Pole Mount, 4-Hole, Alum

SE-2176 - [ ] Coating

PNC=Process No Color
P_ _=Paint

Flat Back Adapter, Round Push Button, Alum

SE-0279 - [ ] Coating

PNC=Process No Color
P_ _=Paint

Body Assy, Rectangular Pole Mnt, Alum

SE-2141 - [ ] Coating

PNC=Process No Color
P_ _=Paint

Body Assy, Rectangular Flat Back, Alum

SE-2139 - [ ] Coating

PNC=Process No Color
P_ _=Paint

Body Assy, Oval Push Button Pole Mount

SE-2140 - [ ] Coating

PNC=Process No Color
P_ _=Paint

Flat Back Adapter, Oval Push Button, Alum

SE-0270 - [ ] Coating

PNC=Process No Color
P_ _=Paint

Arrow Kit, Adjustable, Oval Push Button, Alum

SE-2504 - [ ] Arrow - [ ] Coating

1=Single
2=Double

PNC=Process No Color
P_ _=Paint

Adapter Kit, Round Cover to Body, Alum

SE-2507-PNC

Note: Required for adapting round cechanical cover to older style round bodies and stations.

Note: 1. All assemblies are supplied standard with stainless steel fasteners.
2. See Reference Section page v for available paint colors.

Pedestrian Signs
MUTCD Compliant

R10-2a

SF-1085- [Size] - [3/8" Mtg Holes] - PNC

Size: 12=9"x12"

3/8" Mtg Holes: Blank=None, 2H=2@10" CTC, 4H=4@7"x10" CTC

R10-3

SF-1014- [Size] - [Arrow] - [3/8" Mtg Holes] - PNC

Size: 7=5"x7-3/4", 12=9"x12"

Arrow: R= Right Man/Arrow, L= Left Man/Arrow, D=Left Man/Double Arrow

3/8" Mtg Holes: Blank=None, 2H=2@6.25" CTC, 2H=2@10" CTC, 4H=4@4"x6.75"CTC, 4@7"x10" CTC

Note: For double sided R10-3 sign order SF-1098.

R10-25

SF-1083- [Size] - [3/8" Mtg Holes] - PNC

Size: 7=5" x 7-3/4", 12=9" x 12"

3/8" Mtg Holes: Blank=None, 2H=2@6.25" CTC, 2H=2@10" CTC, 4H=4@4"x6.75"CTC, 4@7"x10" CTC

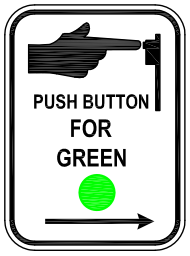

R10-4

SF-1022- [Size] - [Arrow] - [3/8" Mtg Holes] - PNC

Size: 12=9"x12"

Arrow: R= RightArrow, L= Left Arrow, D= Double Arrow

3/8" Mtg Holes: Blank=None, 2H=2@10" CTC, 4H=4@7"x10" CTC

R10-3a

SF-1006- [Size] - [Arrow] - [3/8" Mtg Holes] - PNC

Size: 15=9"x15"

Arrow: R= Right Man/Arrow, L= Left Man/Arrow

3/8" Mtg Holes: Blank=None, 2H=2@13" CTC, 4H=4@7"x13" CTC

R10-4a

SF-1027- [Size] - [Arrow] - [3/8" Mtg Holes] - PNC

Size: 15=9"x15"

Arrow: R= Right Man/Arrow, L= Left Man/Arrow

3/8" Mtg Holes: Blank=None, 2H=2@13" CTC, 4H=4@7"x13" CTC

Note: 1. Standard signs are .063" aluminum with reflective vinyl that complies with ASTM D4956 Type I.
2. MUTCD compliant signs refer to 2009 MUTCD as set by FHWA.

Pedestrian Signs
MUTCD Compliant

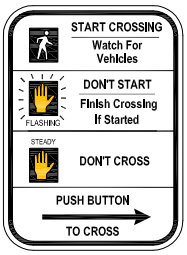

R10-3b

SF-1060- [Size] - [Arrow] - [3/8" Mtg Holes] - PNC

Size: 7=5" x 7-3/4", 12=9"x12"

Arrow: R= Right Man/Arrow, L= Left Man/Arrow

3/8" Mtg Holes: Blank=None, 2H=2@6.25" CTC, 2H=2@10" CTC, 4H=4@4"x6.75"CTC, 4@7"x10" CTC

Note: 5" x 7-3/4" size is non-compliant with MUTCD standards.

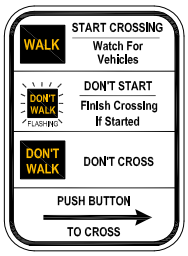

R10-3c

SF-1084- [Size] - [Arrow] - [3/8" Mtg Holes] - PNC

Size: 12=9"x12"

Arrow: R= Right Arrow, L= Left Arrow

3/8" Mtg Holes: Blank=None, 2H=2@10" CTC, 4H=4@7"x10" CTC

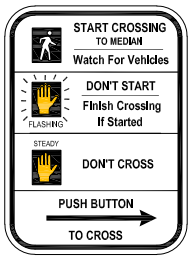

R10-3d

SF-1087- [Size] - [Arrow] - [3/8" Mtg Holes] - PNC

Size: 12=9" x 12"

Arrow: R= Right Arrow, L= Left Arrow, D= Double Arrow

3/8" Mtg Holes: Blank=None, 2H=2@10" CTC, 4H=4@7"x10" CTC

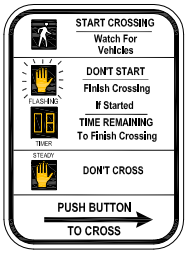

R10-3e

SF-1065- [Size] - [Arrow] - [3/8" Mtg Holes] - PNC

Size: 7=5" x 7-3/4", 12=9" x 12"

Arrow: R= Right Arrow, L= Left Arrow, D= Double Arrow

3/8" Mtg Holes: Blank=None, 2H=2@6.25" CTC, 2H=2@10" CTC, 4H=4@4"x6.75"CTC, 4@7"x10" CTC

Note: 5" x 7-3/4" size is non-compliant with MUTCD standards.

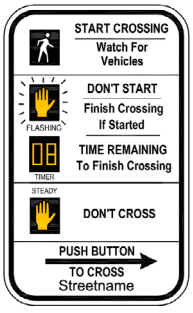

R10-3i

SF-1100- [Size] - [Arrow] - [3/8" Mtg Holes] - [Streetname] - PNC

Size: 15=9" x 15"

Arrow: R= Right Arrow, L= Left Arrow, D= Double Arrow

3/8" Mtg Holes: Blank=None, 2H=2@13" CTC, 4H=4@7"x13" CTC

Streetname: Specify Street Name Required

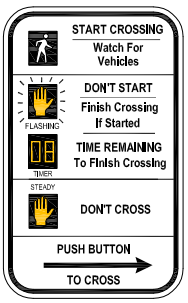

R10-3e

SF-1074- [Size] - [Arrow] - [3/8" Mtg Holes] - PNC

Size: 15=9"x15"

Arrow: R= Right Arrow, L= Left Arrow, D= Double Arrow

3/8" Mtg Holes: Blank=None, 2H=2@13" CTC, 4H=4@7"x13" CTC

Note: For double sided R10-3e sign order SF-1099.

Note: 1. Standard signs are .063" aluminum with reflective vinyl that complies with ASTM D4956 Type I.
2. MUTCD compliant signs refer to 2009 MUTCD Standards as set by FHWA.

ISO 9001
www.intlcert.com

Pedestrian Signs
Custom

SF-1002- [Size] - [Arrow] - [3/8" Mtg Holes] - PNC

Size: 7=5" x 7-3/4", 12=9" x 12"

Arrow: R= Right Arrow, L= Left Arrow, D= Double Arrow

3/8" Mtg Holes: Blank=None, 2H=2@6.25" CTC, 2H=2@10" CTC, 4H=4@4"x6.75"CTC, 4@7"x10" CTC

SF-1010- [Size] - [Arrow] - [3/8" Mtg Holes] - PNC

Size: 12=9" x 12"

Arrow: R= Right Man/Arrow, L= Left Man/Arrow

3/8" Mtg Holes: Blank=None, 2H=2@10" CTC, 4H=4@7"x10" CTC

SF-1018- [Size] - [Arrow] - [3/8" Mtg Holes] - PNC

Size: 7=5" x 7-3/4", 12=9" x 12"

Arrow: Blank= None, R= Right Arrow, L= Left Arrow, D= Double Arrow

3/8" Mtg Holes: Blank=None, 2H=2@6.25" CTC, 2H=2@10" CTC, 4H=4@4"x6.75"CTC, 4@7"x10" CTC

SF-1031- [Size] - [Arrow] - [3/8" Mtg Holes] - PNC

Size: 7=5" x 7-3/4", 12=9" x 12"

Arrow: R= Right Man/Arrow, L= Left Man/Arrow, D= Right Man/ Double Arrow

3/8" Mtg Holes: Blank=None, 2H=2@6.25" CTC, 2H=2@10" CTC, 4H=4@4"x6.75"CTC, 4@7"x10" CTC

SF-1008- [Size] - [3/8" Mtg Holes] - PNC

Size: 12=9"x12"

3/8" Mtg Holes: Blank=None, 2H=2@10" CTC, 4H=4@7"x10" CTC

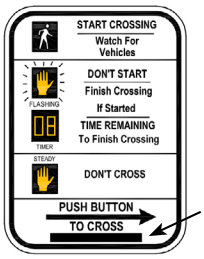

Braille:
Push Button to Cross

SF-8065- [Size] - [Arrow] - [3/8" Mtg Holes] - PNC

Size: 7=5" x 7-3/4", 12=9" x 12", 15=9" x 15"

Arrow: B=Blank, R= Right Arrow, L= Left Arrow, D= Double Arrow

3/8" Mtg Holes: Blank=None, 2H=2@6.25" CTC, 2@10" CTC, 2@13" CTC, 4H=4@4"x6.75"CTC, 4@7"x10" CTC, 4@7"x13" CTC

Note: 1. Standard signs are .063" aluminum with reflective vinyl that complies with ASTM D4956 Type I.
2. Custom signs are non-compliant with MUTCD standards. Additional custom signs are available upon request.

This page is intentionally left blank.

Flasher Controllers

Aluminum Flasher Cabinets are weather resistant and are available for rear, top and bottom mounting. Various brackets are available for mounting to wood or metal poles. A complete line of Type II or Police Type cabinets are available.

Flasher Controller Assy w/ 5-Pin Flasher

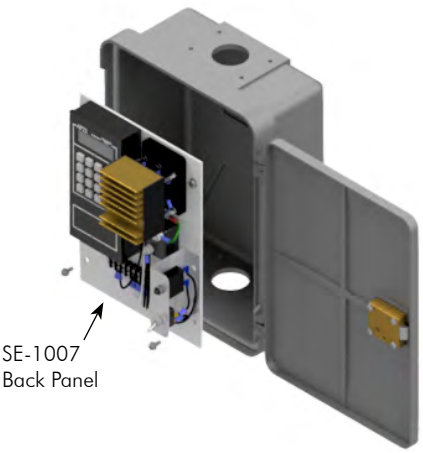

SE-1007
Back Panel

SE-1000 - [Mount] - [Coating]

Mount:
T=Top Mount
B=Bottom Mount
R=Rear Mount
TB=Top/Bottom Mount
TBR=Top/Bottom & Rear Mount
NM=No Mount

Coating:
PNC=Process No Color
P_ _=Paint

Top/Bottom Mount

Rear Mount

Note:
Includes Time Clock, Lightning Arrestor, Circuit Breaker & Toggle Switch.

Flasher Controller Assy w/ Nema Flasher

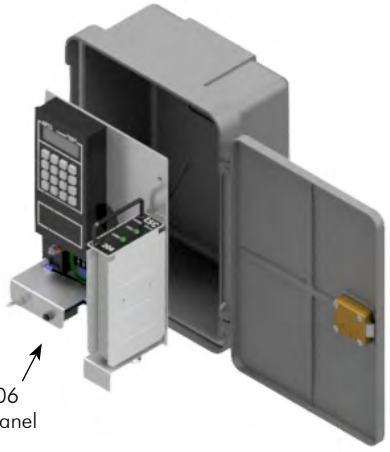

SE-1006
Back Panel

SE-1004 - [Mount] - [Coating]

Mount:
T=Top Mount
B=Bottom Mount
R=Rear Mount
TB=Top/Bottom Mount
TBR=Top/Bottom & Rear Mount
NM=No Mount

Coating:
PNC=Process No Color
P_ _=Paint

Top/Bottom Mount

Rear Mount

Note:
Includes Time Clock, Lightning Arrestor, Circuit Breaker & Toggle Switch.

Note: 1. All assemblies are supplied standard with stainless steel fasteners.
2. See Reference Section page v for available paint colors.

Flasher Controllers

Aluminum Flasher Cabinets are weather resistant and are available for rear, top and bottom mounting. Various brackets are available for mounting to wood or metal poles. A complete line of Type II or Police Type cabinets are available.

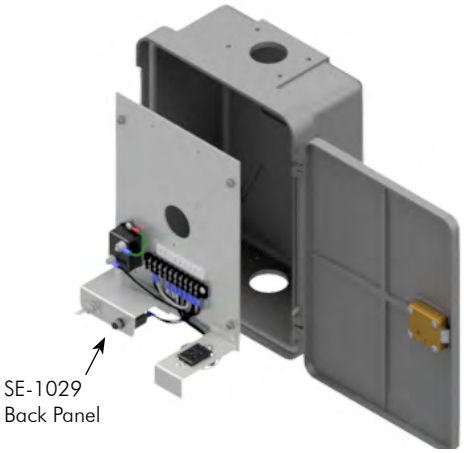

SE-1029
Back Panel

Flasher Controller Cabinet Assy w/o Time Clock, Alum

SE-1014 - [Mount] - [Flasher] - [Coating]

Mount:
T=Top Mount
B=Bottom Mount
R=Rear Mount
TB=Top/Bottom Mount
TBR=Top/Bottom & Rear Mount
NM=No Mount

Flasher:
Blank=None
F=Nema Flasher

Coating:
PNC=Process No Color
P_ _=Paint

Top/Bottom Mount

Rear Mount

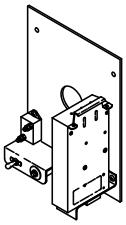

SE-1015, Backpanel with Flasher

Note:
Includes Lightning Arrestor, Circuit Breaker & Toggle Switch. Nema Flasher optional.

Flasher Cabinet Assy w/ Police Type Lock, Alum

SE-1002 - [Mount] - [Coating]

Mount:
T=Top Mount
B=Bottom Mount
R=Rear Mount
TB=Top/Bottom Mount
TBR=Top/Bottom & Rear Mount
NM=No Mount

Coating:
PNC=Process No Color
P_ _=Paint

Top/Bottom Mount

Rear Mount

Note: 1. All assemblies are supplied standard with stainless steel fasteners.
2. See Reference Section page v for available paint colors.

ISO 9001
www.intlcert.com

Mounting Assemblies

Aluminum Flasher Cabinets are weather resistant and are available for rear, top and bottom mounting. Various brackets are available for mounting to wood or metal poles. A complete line of Type II or Police Type cabinets are available.

SE-2518-SS
Gasket & Hardware

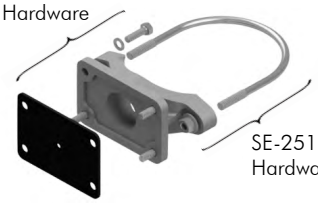

SE-2517-SS
Hardware Kit

Mounting Kit, Alum for 4" (4-1/2" OD) Post

SE-1100 - [ ] Coating

PNC=Process No Color
P__=Paint

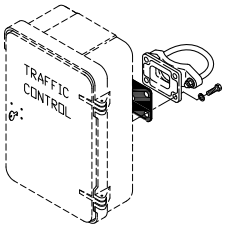

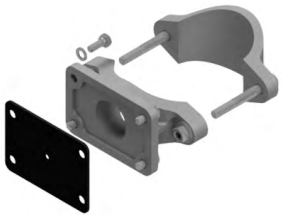

Mounting Kit, Alum For 3" (3-1/2" OD) Post

SE-1101 - [ ] Coating

PNC=Process No Color
P__=Paint

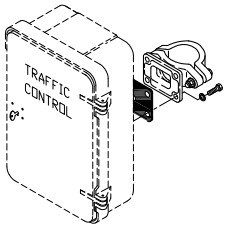

Mounting Kit, Alum For Wood Pole w/ 1-1/2" Single Hub & Closure Plate

SE-1103 - [ ] Coating

PNC=Process No Color
P__=Paint

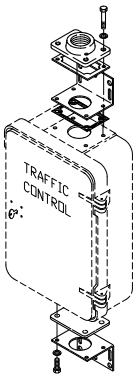

Mounting Kit, Alum Sweep Elbows

SE-1104 - [ ] Coating

PNC=Process No Color
P__=Paint

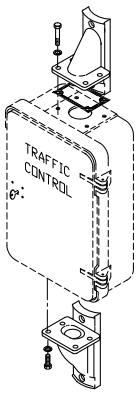

Note: 1. All assemblies are supplied standard with stainless steel fasteners.
2. See Reference Section page v or available paint colors.

Type I & Type IB Police Lock

Aluminum Flasher Cabinets are weather resistant and are available for rear, top and bottom mounting. Various brackets are available for mounting to wood or metal poles. A complete line of Type II or Police Type cabinets are available.

Cabinet Lock, Police Type I

Keys

SM-1012 - ☐ - BRS

0K=Lock Only
1SK=Lock w/ 1 Short Key
2SK=Lock w/ 2 Short Keys
1LK=Lock w/ 1 Long Key
2LK=Lock w/ 2 Long Keys

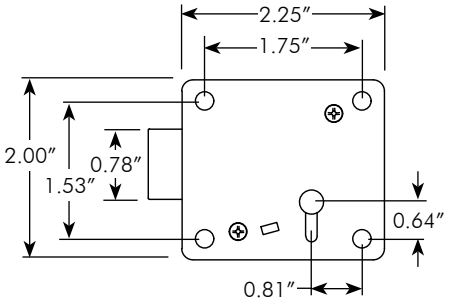

SM-0109-BRS **Short Key, Type I Cabinet Lock, 1-3/4”**

SM-0200-BRS **Long Key, Type I Cabinet Lock, 2-5/8”**

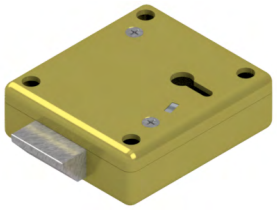

Cabinet Lock, Type IB

Keys

SM-1021 - ☐ - BRS

0K=Lock Only
1SK=Lock w/ 1 Key
2SK=Lock w/ 2 Keys

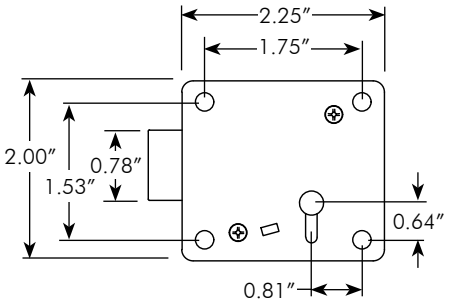

SM-0338-M1 **Key, Type IB Cabinet Lock, Nickle Plated**

Note: 1. Specify key options when ordering.

Type II Tumbler Lock

Aluminum Flasher Cabinets are weather resistant and are available for rear, top and bottom mounting. Various brackets are available for mounting to wood or metal poles. A complete line of Type II or Police Type cabinets are available.

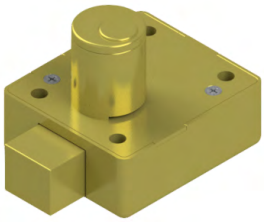

Cabinet Lock, Type II Square Latch

Keys

SM-1026 - [ ] - BRS

OK=Lock Only
1K=Lock w/ 1 Key
2K=Lock w/ 2 Keys

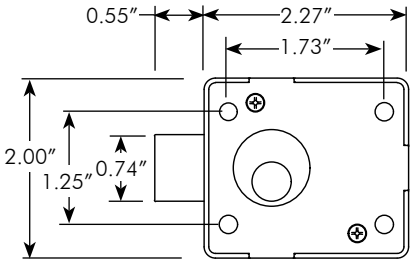

Note:
Right hand shown, left hand opposite.

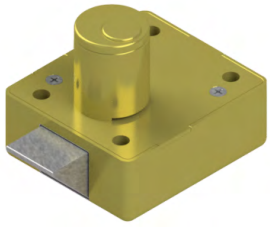

Cabinet Lock, Type II Tapered Latch

Keys

SM-1023 - [ ] - BRS

OK=Lock Only
1K=Lock w/ 1 Key
2K=Lock w/ 2 Keys

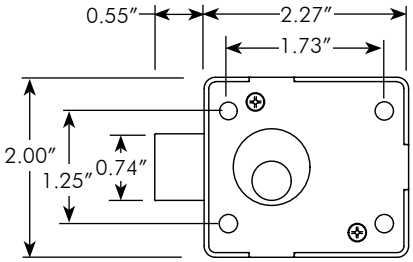

Note:
Right hand shown, left hand opposite.

SM-0198-2-CRM **Key, Type II Cabinet Lock**

SM-0198-B-CRM **Blank Key, Type II Cabinet Lock**

Note: 1. Unless otherwise specified, all locks will be provided to fit a Type II Key. All locks can be supplied with other key configurations upon request at an additional charge.

This page is intentionally left blank.

PELCO PRODUCTS, INC.

ISO 9001
www.intlcert.com

AeroFlex® Backplates

Pelco's innovative flexible backplate design reduces stress to the backplate, signal, signal mount, and mountng structure at elevated wind speeds. AeroFlex Backplates are fabricated from black dual durometer thermoplastics that combine rigidity and flexibility. The universal design will fit most current signal manufactures, while signal specific backplates are available upon request. Available with 2″ or 3″ reflective borders.

Universal Straight Backplate
AeroFlex, Dual Durometer PVC

BK-8000 - [ ] - [ ] - PNC

Signal Section
1=1-Sec
2=2-Sec
3=3-Sec
4=4-Sec
5=5-Sec

Reflective Borders
Blank=No Tape
RT2= 2″ Reflective Tape
RT3= 3″ Reflective Tape

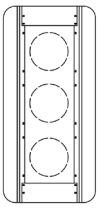

Note:
The universal AeroFlex backplate will fit 13½″ Peek, McCain, and Mark IV signals, and 14″ Econolite, Eagle SA, and North American signals. For Eagle SG signals see signal specific AeroFlex Backplates BK-8100.

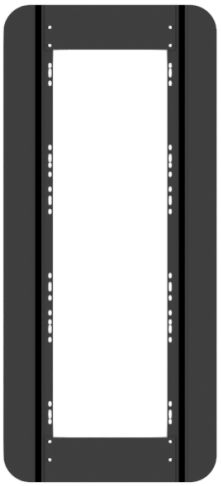

BK-8000-3-PNC
12″, 3-Section Universal
EXAMPLE

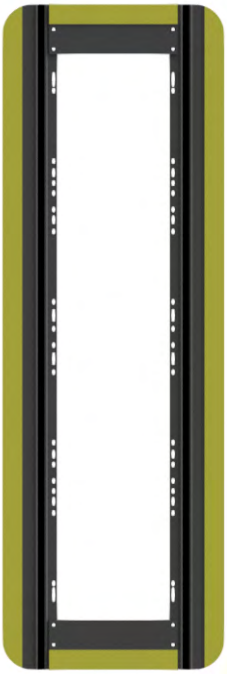

BK-8000-4-RT2-PNC
12″, 3-Section Universal
w/ 2″ Reflective Tape
EXAMPLE

Note:
1. For signal specific straight AeroFlex backplates see page T10-2.
2. For backplate matrix see page T10-17 thru 21.
3. Reflective tape meets ASTM D4956 Type XI 4081 reflective specification.

AeroFlex® Backplates

Pelco's innovative flexible backplate design reduces stress to the backplate, signal, signal mount, and mountng structure at elevated wind speeds. AeroFlex Backplates are fabricated from black dual durometer thermoplastics that combine rigidity and flexibility. The universal design will fit most current signal manufactures, while signal specific backplates are available upon request. Available with 2" or 3" reflective borders.

Signal Specific Straight Backplate, AeroFlex Dual Durometer PVC

BK-8100 - [Signal Section] - [Signal Manufacturer] - [Reflective Borders] - PNC

Signal Section	Signal Manufacturer	Reflective Borders
1=1-Sec	EagleSA=Eagle SA	Blank=No Tape
2=2-Sec	EagleSG=Eagle SG	RT2= 2" Reflective Tape
3=3-Sec	McCain=McCain	RT3= 3" Reflective Tape
4=4-Sec	Econolite=Econolite	
5=5-Sec	PeekTCT=Peek & TCT	

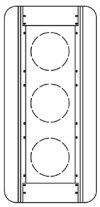

Note: Designed to fit each specific manufacturers signal.

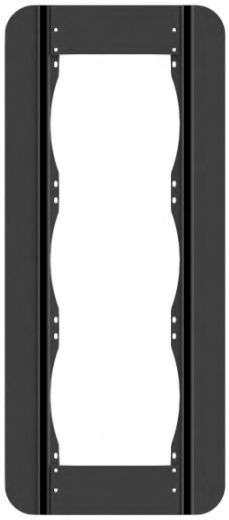

BK-8100-3-EagleSG-PNC
12", 3-Section Eagle SG
EXAMPLE

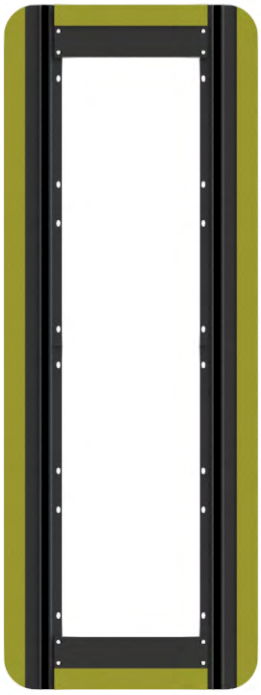

BK-8100-4-McCain-RT2-PNC
12", 4-Section McCain
w/ 2" Reflective Tape
EXAMPLE

Note:
1. For univeral straight AeroFlex backplates see page T10-1.
2. For backplate matrix see page T10-17 thru 21.
3. Reflective tape meets ASTM D4956 Type XI 4081 reflective specification.

ISO 9001 www.intlcert.com

AeroFlex® Backplates

Pelco's innovative flexible backplate design reduces stress to the backplate, signal, signal mount, and mountng structure at elevated wind speeds. AeroFlex Backplates are fabricated from black dual durometer thermoplastics that combine rigidity and flexibility. The universal design will fit most current signal manufactures, while signal specific backplates are available upon request. Available with 2″ or 3″ reflective borders.

Signal Specific Plumbizer Backplate, AeroFlex Dual Durometer PVC

BK-8101 - [Signal Section] - [Signal Manufacturer] - [Reflective Borders] - PNC

Signal Section	Signal Manufacturer	Reflective Borders
3=3-Sec	EagleSG=Eagle SG	Blank=No Tape
4=4-Sec	McCain=McCain	RT2= 2″ Reflective Tape
	PeekTCT=Peek & TCT	RT3= 3″ Reflective Tape

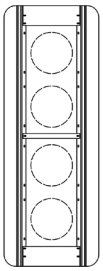

Note: Designed to fit each specific manufacturers signal.
Universal backplates for plumbizer mounted signals are not available.

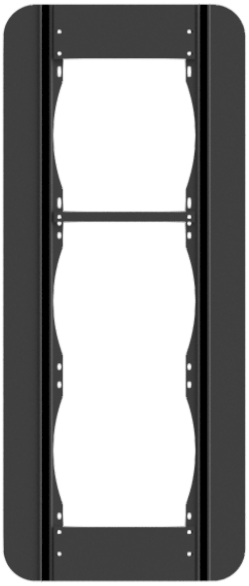

BK-8101-3-EagleSG-PNC
12″, 3-Section Eagle SG Plumbizer Mnt
EXAMPLE

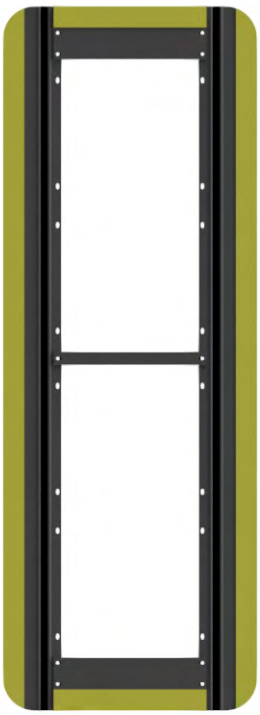

BK-8101-4-McCain-RT2-PNC
12″, 4-Section McCain Plumbizer Mnt
w/ 2″ Reflective Tape
EXAMPLE

Note:
1. Plumbizer mounted AeroFlex backplates are only available for dedicated signal manufacturers. Universal not available.
2. For backplate matrix see page T10-17 thru 21.
3. Reflective tape meets ASTM D4956 Type XI 4081 reflective specification.

AeroFlex® Backplates

Pelco's innovative flexible backplate design reduces stress to the backplate, signal, signal mount, and mountng structure at elevated wind speeds. AeroFlex Backplates are fabricated from black dual durometer thermoplastics that combine rigidity and flexibility. The universal design will fit most current signal manufactures, while signal specific backplates are available upon request. Available with 2" or 3" reflective borders.

Universal 3-Section Hawk Backplate, AeroFlex Dual Durometer PVC

	Center to Center		Reflective Borders	
BK-8003 -	☐	-	☐	- PNC
	16=16" CTC 16.5=16-1/2" CTC 17=17" CTC		Blank=No Tape RT2= 2" Reflective Tape RT3= 3" Reflective Tape	

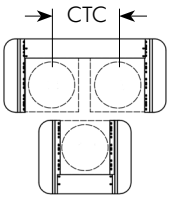

Note:
The universal AeroFlex backplate will fit 13½" Peek, McCain, and Mark IV signals, and 14" Econolite, Eagle SA, and North American signals. For Eagle SG signals see signal specific AeroFlex Backplates BK-8103.

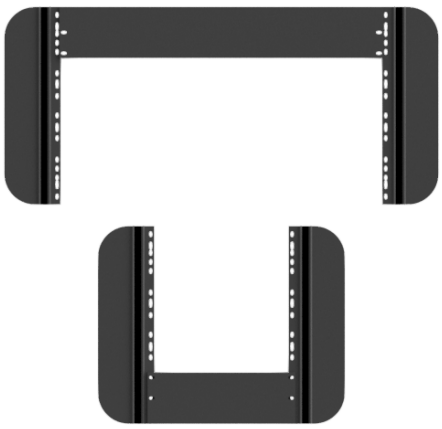

BK-8003-17-PNC
12", 3-Section Cluster Hawk, 17" CTC
EXAMPLE

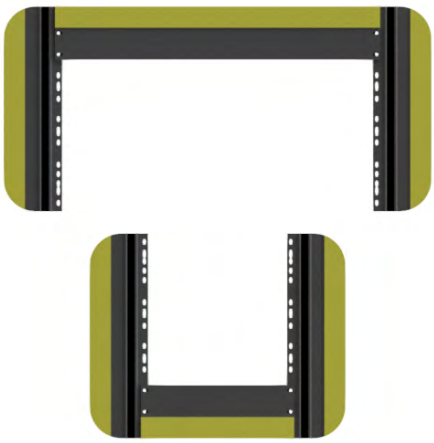

BK-8003-16-RT2-PNC
12", 3-Section Cluster Hawk, 16" CTC
w/ 2" Reflective Tape
EXAMPLE

Note:
1. For signal specific 3-section Hawk AeroFlex backplate see page T10-5.
2. For backplate matrix see page T10-17 thru 21.
3. Reflective tape meets ASTM D4956 Type XI 4081 reflective specification.

ISO 9001 www.intlcert.com

AeroFlex® Backplates

Pelco's innovative flexible backplate design reduces stress to the backplate, signal, signal mount, and mountng structure at elevated wind speeds. AeroFlex Backplates are fabricated from black dual durometer thermoplastics that combine rigidity and flexibility. The universal design will fit most current signal manufactures, while signal specific backplates are available upon request. Available with 2" or 3" reflective borders.

Signal Specific 3-Section Hawk Backplate, AeroFlex Dual Durometer PVC

BK-8103 - [ ] - [ ] - [ ] - PNC

Center to Center	Signal Manufacturer	Reflective Borders
16=16" CTC 16.5=16-1/2" CTC 17=17" CTC	EagleSG=Eagle SG McCain=McCain	Blank=No Tape RT2= 2" Reflective Tape RT3= 3" Reflective Tape

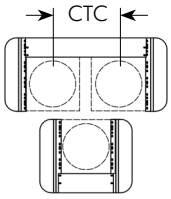

Note: Designed to fit each specific manufacturers signal.

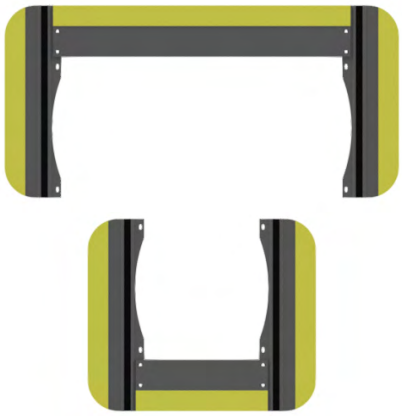

BK-8103-16-EagleSG-RT2-PNC
12", 3-Section Cluster Hawk, Eagle SG, 16" CTC
w/ 2" Reflective Tape
EXAMPLE

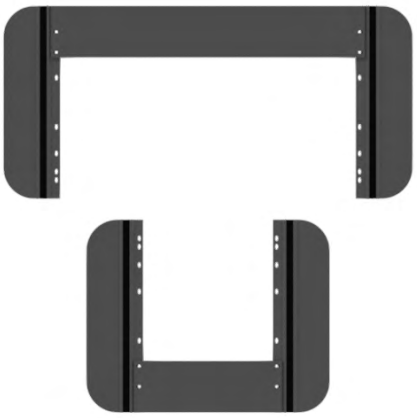

BK-8103-16-McCain-PNC
12", 3-Section Cluster Hawk, McCain, 16" CTC
EXAMPLE

Note:
1. For universal 3-section Hawk AeroFlex backplate see page T10-4.
2. For backplate matrix see page T10-17 thru 21.
3. Reflective tape meets ASTM D4956 Type XI 4081 reflective specification.

AeroFlex® Backplates

Pelco's innovative flexible backplate design reduces stress to the backplate, signal, signal mount, and mountng structure at elevated wind speeds. AeroFlex Backplates are fabricated from black dual durometer thermoplastics that combine rigidity and flexibility. The universal design will fit most current signal manufactures, while signal specific backplates are available upon request. Available with 2" or 3" reflective borders.

Universal 5-Section Cluster Backplate, AeroFlex Dual Durometer PVC

BK-8005 - [Center to Center] - [Reflective Borders] - PNC

Center to Center:
16=16" CTC
16.5=16-1/2" CTC
17=17" CTC

Reflective Borders:
Blank=No Tape
RT2= 2" Reflective Tape
RT3= 3" Reflective Tape

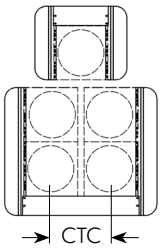

Note:
The universal AeroFlex backplate will fit 13½" Peek, McCain, and Mark IV signals, and 14" Econolite, Eagle SA, and North American signals. For Eagle SG signals see signal specific AeroFlex Backplates BK-8105.

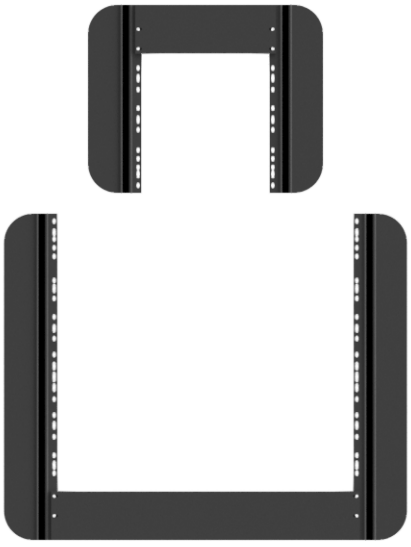

BK-8005-17-PNC
12", 5-Section Cluster, 17" CTC
EXAMPLE

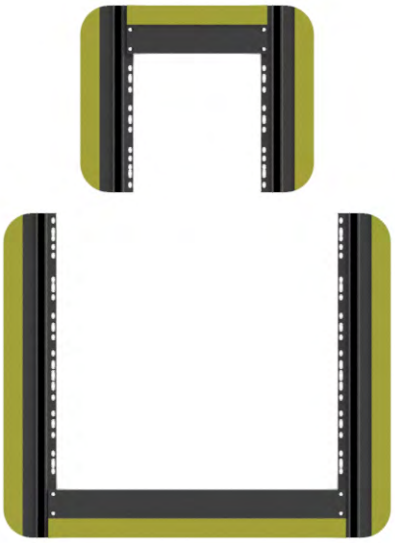

BK-8005-16-RT2-PNC
12", 5-Section Cluster, 16" CTC
w/ 2" Reflective Tape
EXAMPLE

Note:
1. For signal specific 5-section cluster AeroFlex backplate see page T10-7.
2. For backplate matrix see page T10-17 thru 21.
3. Reflective tape meets ASTM D4956 Type XI 4081 reflective specification.

ISO 9001 www.intlcert.com

AeroFlex® Backplates

Pelco's innovative flexible backplate design reduces stress to the backplate, signal, signal mount, and mountng structure at elevated wind speeds. AeroFlex Backplates are fabricated from black dual durometer thermoplastics that combine rigidity and flexibility. The universal design will fit most current signal manufactures, while signal specify backplates are available upon request. Reflective borders also available.

Signal Specific 5-Section Cluster Backplate, AeroFlex Dual Durometer PVC

BK-8105 - [Center to Center] - [Signal Manufacturer] - [Reflective Borders] - PNC

- Center to Center: 16=16″ CTC; 16.5=16-1/2″ CTC; 17=17″ CTC
- Signal Manufacturer: EagleSG=Eagle SG; McCain=McCain
- Reflective Borders: Blank=No Tape; RT2= 2″ Reflective Tape; RT3= 3″ Reflective Tape

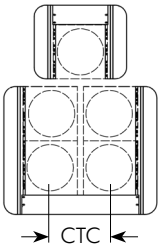

Note: Designed to fit each specific manufacturers signal.

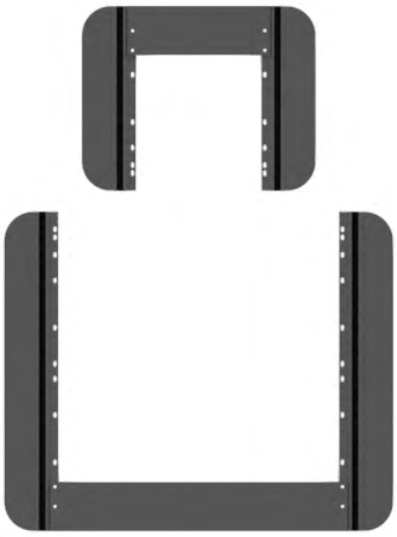

BK-8105-16- McCain-PNC
12″, 5-Section Cluster McCain, 16″ CTC
EXAMPLE

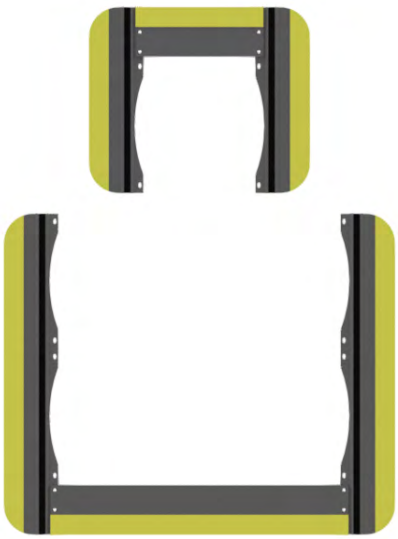

BK-8105-17-RT2- EagleSG-PNC
12″, 5-Section Cluster Eagle SG, 17″ CTC
w/ 2″ Reflective Tape
EXAMPLE

Note:
1. For universal 5-section cluster AeroFlex backplate see page T10-6.
2. For backplate matrix see page T10-17 thru 21.
3. Reflective tape meets ASTM D4956 Type XI 4081 reflective specification.

AeroFlex® Backplates

Pelco's innovative flexible backplate design reduces stress to the backplate, signal, signal mount, and mountng structure at elevated wind speeds. AeroFlex Backplates are fabricated from black dual durometer thermoplastics that combine rigidity and flexibility. The universal design will fit most current signal manufactures, while signal specific backplates are available upon request. Available with 2" or 3" reflective borders.

Universal 4-Section T or Inverted T Backplate, AeroFlex Dual Durometer PVC

BK-8007 - [Center to Center] - [Reflective Borders] - PNC

Center to Center:
- 16=16" CTC
- 16.5=16-1/2" CTC
- 17=17" CTC

Reflective Borders:
- Blank=No Tape
- RT2= 2" Reflective Tape
- RT3= 3" Reflective Tape

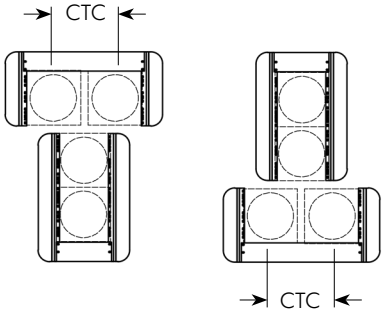

Note:
The universal AeroFlex backplate will fit 13½" Peek, McCain, and Mark IV signals, and 14" Econolite, Eagle SA, and North American signals.

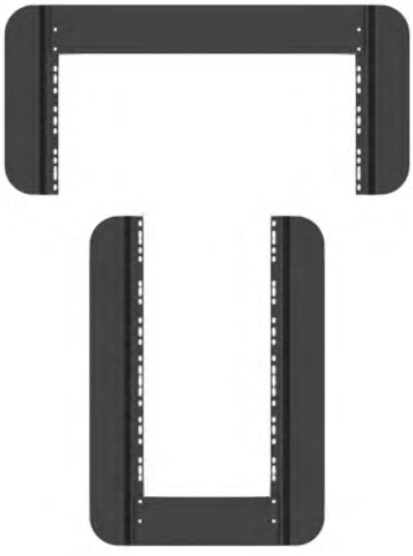

BK-8007-17-PNC
12", 4-Section T / Inverted T, 17" CTC
EXAMPLE

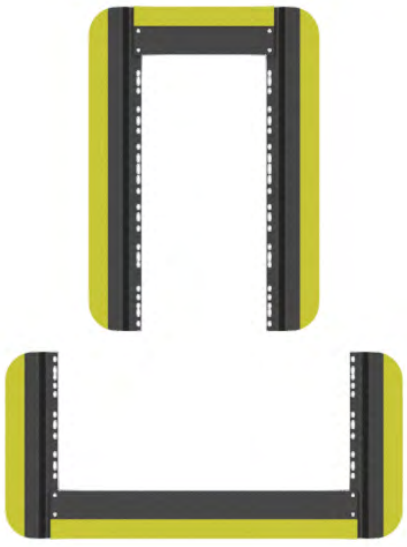

BK-8007-17-RT2-PNC
12", 4-Section T / Inverted T, 17" CTC
w/ 2" Reflective Tape
EXAMPLE

Note:
1. For backplate matrix see page T10-17 thru 21.
2. Reflective tape meets ASTM D4956 Type XI 4081 reflective specification.

ISO 9001 www.intlcert.com

Vacuum Formed ABS

Pelco's vacuum formed backplates are fabricated from black ABS UV stabilized plastic sheeting with a 3" corner radius and a 5/8" flange on all sides. Backplates with reflective borders have a smooth finish on front side, while non-reflective backplates have a haircell finish on front. Backplates are designed to precisely fit each manufacturers' signal head and are supplied with necessary mounting hardware.

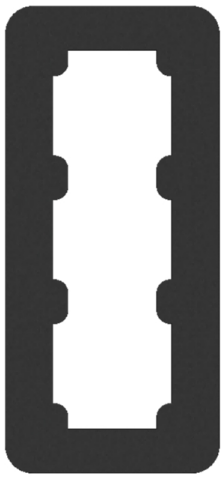

BK-1003-SERIES
12", 3-Section
EXAMPLE

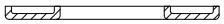

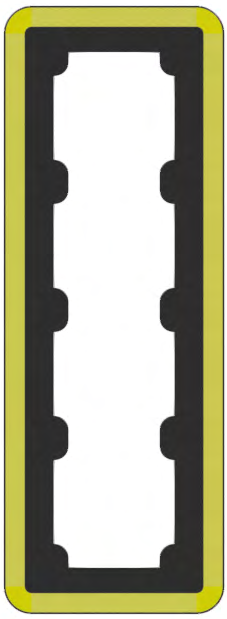

BK-1004-RT2 SERIES
12", 4-Section w/ Reflective Tape
EXAMPLE

BK-1000 Series
Straight Backplates,
Vacuum Formed ABS Plastic, .125"

	1000 Series		Signal Manufacturer		Reflective Borders	
BK -	1	-		-		- PNC
	See Below		See Below		Blank=No Tape RT2= 2" Reflective Tape	

Note:
Use charts below to specify part number, ie., BK-1003-A-PNC

STRAIGHT VACUUM FORMED BACKPLATES		
Signal Size	No. of Sections	1000 Series Vacuum Formed ABS
8"	1	BK-1012
8"	3	BK-1006
12"	1	BK-1001
12"	2	BK-1002
12"	3	BK-1003
12"	4	BK-1004
12"	5	BK-1005

SIGNAL MANUFACTURER	
Peek/TCT (alum 13-1/2" tall)	C
Eagle SG/Automatic (poly 13-1/2" tall)	A
Mark IV (alum 13-1/2" tall)	F
McCain (alum/poly 13-1/2" tall)	N
Eagle SA (poly 14" tall)	E
Econolite (alum/poly 14" tall)	L3/L4

Note:
1. Backplates for all Signal Manufacturers may not be available.
2. For backplate matrix see page T10-17 thru 21.
3. Reflective tape meets ASTM D4956 Type XI 4081 reflective specification.

Vacuum Formed ABS

Pelco's vacuum formed backplates are fabricated from black ABS UV stabilized plastic sheeting with a 3" corner radius and a 5/8" flange on all sides. Backplates with reflective borders have a smooth finish on front side, while non-reflective backplates have a haircell finish on front. Backplates are designed to precisely fit each manufacturers' signal head and are supplied with necessary mounting hardware.

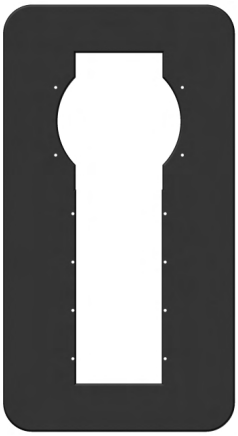

BK-1011-SERIES
12"-8"-8", 3-Section
EXAMPLE

BK-1014-RT2 SERIES
12"-12"-8"-8"-8", 5-Section w/ Reflective Tape
EXAMPLE

BK-1000 Series Combination Backplates, Vacuum Formed ABS Plastic, .125"

	1000 Series		Signal Manufacturer		Reflective Borders	
BK -	[1]	-	[ ]	-	[ ]	- PNC
	See Below		See Below		Blank=No Tape RT2= 2" Reflective Tape	

Note:
Use charts below to specify part number, ie., BK-1011-A-PNC

COMBINATION VACUUM FORMED BACKPLATES		
Signal Size	No. of Sections	1000 Series Vacuum Formed ABS
12"-8"-8"	3	BK-1011
12"-12"-8"-8"-8"	5	BK-1014

SIGNAL MANUFACTURER	
Peek/TCT (alum 13-1/2" tall)	C
Eagle SG/Automatic (poly 13-1/2" tall)	A
Mark IV (alum 13-1/2" tall)	F
McCain (alum/poly 13-1/2" tall)	N
Eagle SA (poly 14" tall)	E
Econolite (alum/poly 14" tall)	L3/L4

Note:
1. Backplates for all Signal Manufacturers may not be available.
2. For backplate matrix see page T10-17 thru 21.
3. Reflective tape meets ASTM D4956 Type XI 4081 reflective specification.

ISO 9001 www.intlcert.com

Vacuum Formed ABS

Pelco's vacuum formed backplates are fabricated from black ABS UV stabilized plastic sheeting with a 3" corner radius and a 5/8" flange on all sides. Backplates with reflective borders have a smooth finish on front side, while non-reflective backplates have a haircell finish on front. Backplates are designed to precisely fit each manufacturers' signal head and are supplied with necessary mounting hardware.

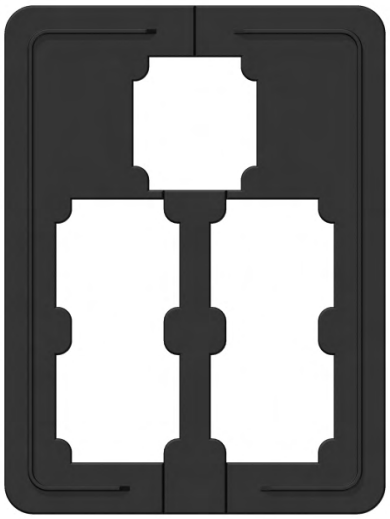

BK-1007-SERIES
5-Section Cluster
EXAMPLE

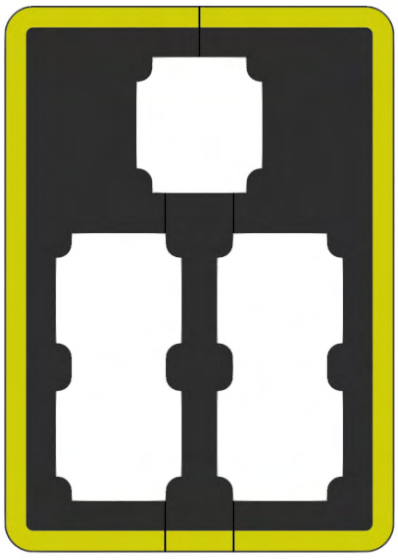

BK-1010-RT2 SERIES
5-Section Cluster w/ Reflective Tape
EXAMPLE

BK-1000 Series
5-Sec Cluster Backplates, Vacuum Formed ABS Plastic, .125"

	1000 Series		Signal Manufacturer		Reflective Borders	
BK -	[1]	-	[ ]	-	[ ]	- PNC
	See Below		See Below		Blank=No Tape RT2= 2" Reflective Tape	

Note:
Use charts below to specify part number, ie., BK-1007-A-PNC

CLUSTER VACUUM FORMED BACKPLATES			
Signal Size	No. of Sections	1000 Series Vacuum Formed ABS	Mounting Application
12" / 12" 12" / 12" 12"	5	BK-1007	AS-0109 Astro-Brac 16" CTC
12" / 12" 12" / 12" 12"	5	BK-1010	Span Wire 16-1/2" CTC
12" / 12" 12" / 12" 12"	5	BK-1021	Span Wire Casting 17" CTC
12" / 12" 12" / 12" 12"	5	BK-1015	Plumbizer Mount 17" CTC

SIGNAL MANUFACTURER	
Peek/TCT (alum 13-1/2" tall)	C
Eagle SG/Automatic (poly 13-1/2" tall)	A
Mark IV (alum 13-1/2" tall)	F
McCain (alum/poly 13-1/2" tall)	N
Eagle SA (poly 14" tall)	E
Econolite (alum/poly 14" tall)	L3/L4

Note:
1. Backplates for all Signal Manufacturers may not be available.
2. For backplate matrix see page T10-17 thru 21.
3. Reflective tape meets ASTM D4956 Type XI 4081 reflective specification.

Vacuum Formed ABS

Pelco's vacuum formed backplates are fabricated from black ABS UV stabilized plastic sheeting with a 3" corner radius and a 5/8" flange on all sides. Backplates with reflective borders have a smooth finish on front side, while non-reflective backplates have a haircell finish on front. Backplates are designed to precisely fit each manufacturers' signal head and are supplied with necessary mounting hardware.

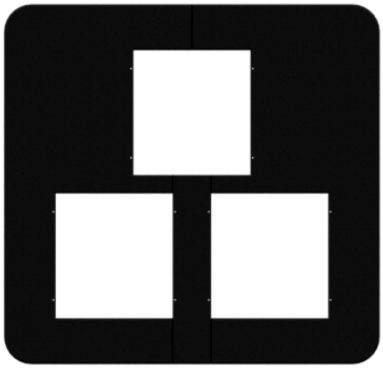

BK-1032-SERIES
3-Section Hawk Cluster
EXAMPLE

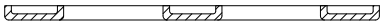

BK-1000 Series
Hawk 3-Sec Cluster Backplates, Vacuum Formed ABS Plastic, .125"

	1000 Series		Signal Manufacturer		Reflective Borders	
BK -	[1]	-	[ ]	-	[ ]	- PNC
	See Below		See Below		Blank=No Tape RT2= 2" Reflective Tape	

Note:
Use charts below to specify part number, ie., BK-1007-A-PNC

CLUSTER VACUUM FORMED BACKPLATES			
Signal Size	No. of Sections	1000 Series Vacuum Formed ABS	Mounting Application
12"|12" / 12"	3	BK-1032	AG/AS-0167 or AG/AS-0168 Astro-Brac 17" CTC
12"|12" / 12"	3	BK-1034	Plumbizer Mount 17" CTC

SIGNAL MANUFACTURER	
Peek/TCT (alum 13-1/2" tall)	C
Eagle SG/Automatic (poly 13-1/2" tall)	A
Mark IV (alum 13-1/2" tall)	F
McCain (alum/poly 13-1/2" tall)	N
Eagle SA (poly 14" tall)	E
Econolite (alum/poly 14" tall)	L3/L4

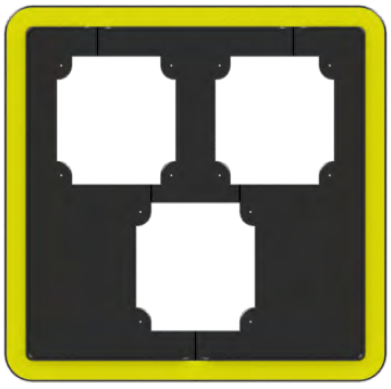

BK-1032-RT2 SERIES
3-Section Hawk Cluster w/ Reflective Tape
EXAMPLE

Note:
1. Backplates for all Signal Manufacturers may not be available.
2. For backplate matrix see page T10-17 thru 21.
3. Reflective tape meets ASTM D4956 Type XI 4081 reflective specification.

ISO 9001 www.intlcert.com

Louvered Vacuum Formed ABS

Pelco's louvered vacuum formed backplates are fabricated from black ABS UV stabilized plastic sheeting with a 3" corner radius, 5/8" flange on all sides, with a haircell finish on the front side. Backplates are designed to precisely fit each manufacturers' signal head and are supplied with necessary mounting hardware.

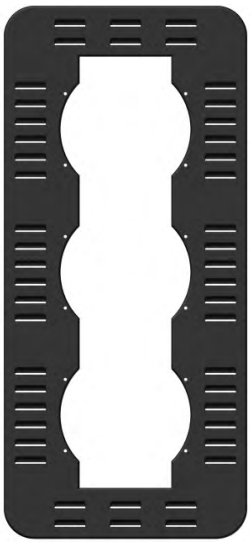

BK-5003-SERIES
12", 3-Section
EXAMPLE

BK-5000 Series
Louvered Straight Backplates, Vacuum Formed ABS Plastic, .125"

	5000 Series		Signal Manufacturer	
BK -	5	-		- PNC

Note:
Use charts below to specify part number, ie., BK-5003-A-PNC

STRAIGHT LOUVERED BACKPLATES		
Signal Size	No. of Sections	5000 Series Vacuum Formed ABS
12"	3	BK-5003
12"	4	BK-5004
12"	5	BK-5005

SIGNAL MANUFACTURER	
Peek/TCT (alum 13-1/2" tall)	C
Eagle SG/Automatic (poly 13-1/2" tall)	A
Mark IV (alum 13-1/2" tall)	F
McCain (alum/poly 13-1/2" tall)	N
Eagle SA (poly 14" tall)	E
Econolite (alum/poly 14" tall)	L3/L4

Note:
1. Backplates for all Signal Manufacturers may not be available.
2. For backplate matrix see page T10-17 thru 21.
3. Reflective tape not available on louvered backplates.

Louvered Vacuum Formed ABS

Pelco's louvered vacuum formed backplates are fabricated from black ABS UV stabilized plastic sheeting with a 3" corner radius, 5/8" flange on all sides, with a haircell finish on the front side. Backplates are designed to precisely fit each manufacturers' signal head and are supplied with necessary mounting hardware.

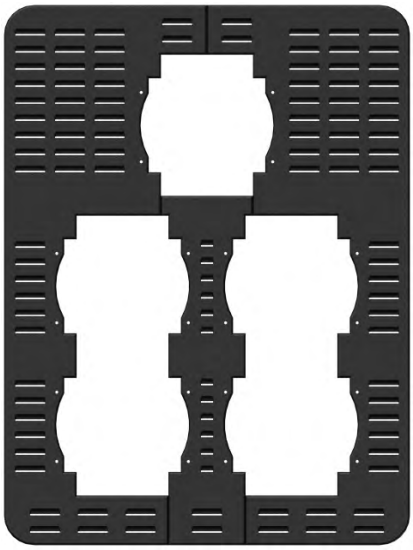

BK-5021-SERIES
5-Section
EXAMPLE

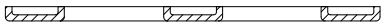

BK-5000 Series
Louvered 5-Section Cluster Backplates, Vacuum Formed ABS Plastic, .125"

	5000 Series		Signal Manufacturer	
BK -	5	-		- PNC

Note:
Use charts below to specify part number, ie., BK-5021-A-PNC

CLUSTER LOUVERED BACKPLATES			
Signal Size	No. of Sections	1000 Series Vacuum Formed ABS	Mounting Application
12" / 12" 12" / 12" 12"	5	BK-5007	AS-0109 Astro-Brac 16" CTC
12" / 12" 12" / 12" 12"	5	BK-5010	Span Wire 16-1/2" CTC
12" / 12" 12" / 12" 12"	5	BK-5021	Span Wire Casting 17" CTC

SIGNAL MANUFACTURER	
Peek/TCT (alum 13-1/2" tall)	C
Eagle SG/Automatic (poly 13-1/2" tall)	A
Mark IV (alum 13-1/2" tall)	F
McCain (alum/poly 13-1/2" tall)	N
Eagle SA (poly 14" tall)	E
Econolite (alum/poly 14" tall)	L3/L4

Note:
1. Backplates for all Signal Manufacturers may not be available.
2. For backplate matrix see page T10-17 thru 21.
3. Reflective tape not available on louvered backplates.

Split Vacuum Formed Backplates

Split backplates allow for easy installation without removing the signal from its mounting bracketry. Backplates are fabricated from black ABS UV stabilized plastic sheeting with a 3″ corner radius and a 5/8″ flange on all sides. Backplates with reflective borders have a smooth finish on front side, while non-reflective backplates have a haircell finish on front. Backplates are designed to precisely fit each manufacturers' signal head and are supplied with necessary mounting hardware.

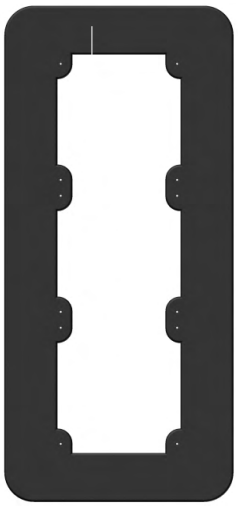

BK-4003-SERIES
12″, 3-Section Split
EXAMPLE

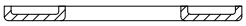

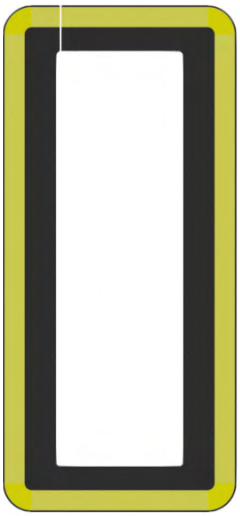

BK-4003-RT2 SERIES
3-Section Split w/ Reflective Tape
EXAMPLE

BK-4000 Series
Split Backplates
Vaccum Formed, .125″

	4000 Series		Signal Manufacturer		Reflective Borders	
BK -	4	-		-		- PNC
	See Below		See Below		Blank=No Tape RT2= 2″ Reflective Tape	

Note:
Use charts below to specify part number, ie., BK-4003-A-PNC

SPLIT BACKPLATES		
Signal Size	No. of Sections	4000 Series Vacuum Formed ABS
12″	1	BK-4001
12″	3	BK-4003
12″	4	BK-4004
12″	5	BK-4005
8″	3	BK-4006
12″	3	BK-4503 Louvered
12″	4	BK-4504 Louvered
12″	5	BK-4505 Louvered
12″ / 12″ 12″ / 12″ 12″	5	BK-4009

SIGNAL MANUFACTURER	
Peek/TCT (alum 13-1/2″ tall)	C
Eagle SG/Automatic (poly 13-1/2″ tall)	A
Mark IV (alum 13-1/2″ tall)	F
McCain (alum/poly 13-1/2″ tall)	N
Eagle SA (poly 14″ tall)	E
Econolite (alum/poly 14″ tall)	L3/L4

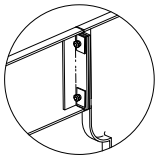

Backplate Split

Note:
1. Backplates for all Signal Manufacturers may not be available.
2. For backplate matrix see page T10-17 thru 21.
3. Reflective tape meets ASTM D4956 Type XI 4081 reflective specification.

Hardware Kits

BK-0121-SS **Hardware Kit, AeroFlex Backplate**

Note: 1. Kit includes: (8) 1/4"-20 x 3/4" Screws, (16) 1/4" Flat Washers, (8) 1/4" Lock Nuts
2. Hardware Kit mounts top and bottom to sides of backplate.

BK-0122-SS **Hardware Kit, AeroFlex Backplate**

Note: 1. Kit includes: (10) 1/4"-20 x 3/4" Screws, (20) 1/4" Flat Washers, (10) 1/4" Lock Nuts
2. Hardware kit mounts top, bottom, and batton to sides of plumbizer backplates.

BK-0120-[ ]-SS **Hardware Kit, AeroFlex Backplate**

Signal Section
3=Set of 12
4=Set of 16
5=Set of 20

Note: 1. Kit includes: #10 x 5/8" Screws, #10 x 1/2" Screws, Rectangular Washers
2. Hardware Kit to mount backplate to both aluminum and poly signals.

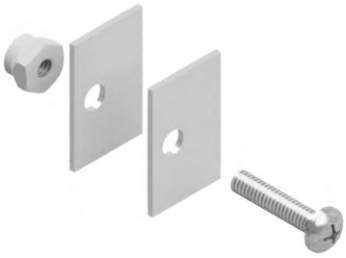

BK-0101-SS **Hardware Kit, Backplate, Stainless**

Note: 1. Kit includes: (12) #8 x 3/4" Screws, (12) Locknuts, (24) Rectangular Washers
2. Hardware Kits are used with A, F, C, L3 alum backplates.

BK-0113-SS **Hardware Kit, Split Backplate, Stainless**

Note: 1. Kit includes: (2) #8 x 3/4" Screws, (2) Locknuts, 4 Rectangular Washers
2. Hardware Kits are used with A, E, C, N, F, L4 split backplates.

BK-0117-SS **Hardware Kit, Backplate, Stainless**

Note: 1. Kit includes: (12) #8 x 7/8" Screws, (12) Locknuts, (240 Rectangular Washers
2. Hardware Kits are used with L4 poly backplates.

BK-0123-[ ]-SS **Hardware Kit, Econolite Backplate**

Signal Section
3=Set of 12
4=Set of 16
5=Set of 20

Note: 1. Kit includes: #10-24 x 1/2" Screws, #10-16 x 1/2" Screws, Rectangular Washers
2. Hardware Kit to mount backplate to both aluminum and poly signals.

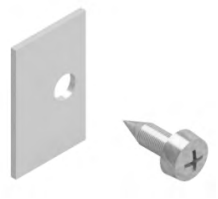

BK-0108-SS **Hardware Kit, Backplate, Stainless**

Note: 1. Kit includes: (12) #8 x 1/2" Screws, (12) Rectangular Washers
2. Hardware Kits are used with E backplates.

BK-0110-SS **Hardware Kit, Backplate, Stainless**

Note: 1. Kit includes: (12) #10 x 1/2" Screws, (12) Rectangular Washers
2. Hardware Kits are used with N, FT backplates.

BK-0106-PNC **Hardware Kit, Backplate**

Note: 1. Kit includes: (8) #10 x 1/2" Screws, (8) #8 Tinnerman Nuts
2. Hardware Kits are used with A, E, F, C, N, L3L4 backplates.

Note: 1. All fasteners, with the exception of the steel tinnerman nut, are stainless.

PELCO PRODUCTS, INC.
ISO 9001
www.intlcert.com

Inline Backplate Matrix

Signal Manufacturer	Suffix	Signal Mat'l	Signal Ht	12" 1-Sec	12" 2-Sec	12" 3-Sec	12" 4-Sec	12" 5-Sec	8" 1-Sec	8" 2-Sec	8"-3-Sec
AeroFlex Dual Durometer PVC- BK-8XXX:											
Universal	N/A	Alum/Poly	13-1/2"/14"	BK-8000-1	BK-8000-2	BK-8000-3	BK-8000-4	BK-8000-5			
Siemens/Eagle SG-Automatic	EagleSG	Poly	13-1/2"			BK-8100-3	BK-8100-4	BK-8100-5			
Peek/TCT	PeekTCT	Alum	13-1/2"			BK-8100-3	BK-8100-4	BK-8100-5			
Siemens/Eagle SA	EagleSA	Poly	14"			BK-8100-3	BK-8100-4	BK-8100-5			
Siemens/Mark IV		Alum	13-1/2"								
Econolite	Econolite	Alum/Poly	14"			BK-8100-3	BK-8100-4	BK-8100-5			
McCain	McCain	Alum/Poly	13-1/2"	BK-8100-1	BK-8100-2	BK-8100-3	BK-8100-4	BK-8100-5			
Vacuum Formed ABS- BK-10XX:											
Siemens/Eagle SG-Automatic	A	Poly	13-1/2"	BK-1001		BK-1003	BK-1004	BK-1005			
Peek/TCT	C	Alum	13-1/2"	BK-1001		BK-1003	BK-1004	BK-1005			BK-1006
Siemens/Eagle SA	E	Poly	14"	BK-1001		BK-1003	BK-1004	BK-1005			BK-1006
Siemens/Mark IV	F	Alum	13-1/2"	BK-1001		BK-1003	BK-1004	BK-1005			
Econolite	L3L4	Alum/Poly	14"			BK-1003	BK-1004	BK-1005			
McCain	N	Alum/Poly	13-1/2"	BK-1001		BK-1003	BK-1004	BK-1005			BK-1006
Vacuum Formed Louvered ABS- BK-50XX:											
Siemens/Eagle SG-Automatic	A	Poly	13-1/2"			BK-5003	BK-5004	BK-5005			
Peek/TCT	C	Alum	13-1/2"			BK-5003	BK-5004	BK-5005			
Siemens/Eagle SA	E	Poly	14"			BK-5003	BK-5004	BK-5005			
Siemens/Mark IV	F	Alum	13-1/2"			BK-5003	BK-5004	BK-5005			
Econolite	L3/L4	Alum/Poly	14"			BK-5003		BK-5005			
McCain	N	Alum/Poly	13-1/2"			BK-5003	BK-5004	BK-5005			
Fortran	FT	Poly	14"			BK-5003	BK-5004				
Split Vacuum Formed- ABS BK-40XX:											
Siemens/Eagle SG-Automatic	A	Poly	13-1/2"			BK-4003	BK-4004	BK-4005			
Peek/TCT	C	Alum	13-1/2"	BK-4001		BK-4003	BK-4004	BK-4005	BK-4006		
Siemens/Eagle SA	E	Poly	14"	BK-4001		BK-4003	BK-4004	BK-4005			
Siemens/Mark IV	F	Alum	13-1/2"			BK-4003	BK-4004	BK-4005			
Econolite	L3L4	Alum/Poly	14"			BK-4003	BK-4004				
McCain	N	Alum/Poly	13-1/2"			BK-4003	BK-4004	BK-4005	BK-4006		
Split Vacuum Formed Louvered ABS- BK-45XX:											
Siemens/Eagle SG-Automatic	A	Poly	13-1/2"			BK-4503	BK-4504	BK-4505			
Peek/TCT	C	Alum	13-1/2"			BK-4503	BK-4504	BK-4505			
Siemens/EagleSA	E	Poly	14"			BK-4503	BK-4504	BK-4505			
Siemens/Mark IV	F	Alum	13-1/2"			BK-4503		BK-4505			
Econolite	L3L4	Alum/Poly	14"								
McCain	N	Alum/Poly	13-1/2"			BK-4503	BK-5404	BK-4505			

Note: 1. See pages T10-1 thru 8 for AeroFlex backplates.
2. See pages T10-9 thru 15 for Vacuum Formed backplates.

Cluster Backplate Matrix

Signal Manufacturer	Suffix	Signal Mat'l	Signal Ht	5-Sec 16" CTC	5-Sec 16-1/2" CTC	5-Sec 17" CTC	5-Sec 17" CTC Plumbizer	5-Sec 13-5/8" CTC No Center	4-Sec 16" CTC T / Invert T	4-Sec 16-1/2" CTC T / Invert T	4-Sec 17" CTC T / Invert T
AeroFlex Dual Durometer PVC- BK-8XXX:											
Universal	N/A	Alum/Poly	13-1/2"/14"	BK-8005-16	BK-8005-16.5	BK-8005-17	BK-8005-17		BK-8007-16	BK-8007-16.5	BK-8007-17
Siemens/Eagle SG-Automatic	EagleSG	Poly	13-1/2"	BK-8105-16		BK-8105-17	BK-8105-17				
Peek/TCT	PeekTCT	Alum	13-1/2"								
Siemens/Eagle SA	EagleSA	Poly	14"								
Siemens/Mark IV		Alum	13-1/2"								
Econolite	Econolite	Alum/Poly	14"								
McCain	McCain	Alum/Poly	13-1/2"	BK-8105-16		BK-8015-17	BK-8105-17				
Vacuum Formed ABS- BK-10XX:											
Siemens/Eagle SG-Automatic	A	Poly	13-1/2"	BK-1007	BK-1010	BK-1021					
Peek/TCT	C	Alum	13-1/2"	BK-1007	BK-1010	BK-1021	BK-1015				
Siemens/Eagle SA	E	Poly	14"	BK-1007	BK-1010	BK-1021		BK-1009			
Siemens/Mark IV	F	Alum	13-1/2"	BK-1007	BK-1010	BK-1021					
Econolite	L3L4	Alum/Poly	14"	BK-1007		BK-1021					
McCain	N	Alum/Poly	13-1/2"	BK-1007	BK-1010	BK-1021					
Vacuum Formed Louvered ABS- BK-50XX:											
Siemens/Eagle SG-Automatic	A	Poly	13-1/2"	BK-5007		BK-5021					
Peek/TCT	C	Alum	13-1/2"	BK-5007		BK-5021					
Siemens/Eagle SA	E	Poly	14"	BK-5007		BK-5021		BK-5009			
Siemens/Mark IV	F	Alum	13-1/2"	BK-5007	BK-5010	BK-5021					
Econolite	L3L4	Alum/Poly	14"								
McCain	N	Alum/Poly	13-1/2"	BK-5007	BK-5010	BK-5021					
Split Vacuum Formed- ABS BK-40XX:											
Siemens/Eagle SG-Automatic	A	Poly	13-1/2"								
Peek/TCT	C	Alum	13-1/2"								
Siemens/Eagle SA	E	Poly	14"					BK-4009			
Siemens/Mark IV	F	Alum	13-1/2"								
Econolite	L3L4	Alum/Poly	14"								
McCain	N	Alum/Poly	13-1/2"								
Split Vacuum Formed Louvered ABS- BK-45XX:											
Siemens/Eagle SG-Automatic	A	Poly	13-1/2"								
Peek/TCT	C	Alum	13-1/2"								
Siemens/EagleSA	E	Poly	14"					BK-4509			
Siemens/Mark IV	F	Alum	13-1/2"								
Econolite	L3L4	Alum/Poly	14"								
McCain	N	Alum/Poly	13-1/2"								

Note: 1. See pages T10-1 thru 8 for AeroFlex backplates.
2. See pages T10-9 thru 15 for Vacuum Formed backplates.

PELCO PRODUCTS, INC.

ISO 9001 www.intlcert.com

Hawk Cluster Backplate Matrix

Signal Manufacturer	Suffix	Signal Mat'l	Signal Ht	3-Sec Hawk 16 CTC	3-Sec Hawk 17" CTC	3-Sec Hawk 17" CTC Plumbizer
AeroFlex Dual Durometer PVC- BK-8XXX:						
Universal	N/A	Alum/Poly	13-1/2"/14"	BK-8003-16	BK-8003-17	BK-8003-17
Siemens/Eagle SG-Automatic	EagleSG	Poly	13-1/2"			
Peek/TCT	PeekTCT	Alum	13-1/2"			
Siemens/Eagle SA	EagleSA	Poly	14"			
Siemens/Mark IV		Alum	14"			
Econolite	Econolite	Alum/Poly	14"			
McCain	McCain	Alum/Poly	13-1/2"	BK-8103-16	BK-8103-17	
Vacuum Formed ABS- BK-10XX:						
Siemens/Eagle SG-Automatic	A	Poly	13-1/2"		BK-1032	
Peek/TCT	C	Alum	13-1/2"		BK-1032	
Siemens/Eagle SA	E	Poly	14"			BK-1034
Siemens/Mark IV	F	Alum	13-1/2"		BK-1032	
Econolite	L3L4	Alum/Poly	14"			
McCain	N	Alum/Poly	13-1/2"			
Vacuum Formed Louvered ABS- BK-50XX:						
Siemens/Eagle SG-Automatic	A	Poly	13-1/2"		BK-5022	
Peek/TCT	C	Alum	13-1/2"			
Siemens/Eagle SA	E	Poly	14"			
Siemens/Mark IV	F	Alum	13-1/2"		BK-5022	
Econolite	L3L4	Alum/Poly	14"			
McCain	N	Alum/Poly	13-1/2"			
Split Vacuum Formed- ABS BK-40XX:						
Siemens/Eagle SG-Automatic	A	Poly	13-1/2"			
Peek/TCT	C	Alum	13-1/2"			
Siemens/Eagle SA	E	Poly	14"			
Siemens/Mark IV	F	Alum	13-1/2"			
Econolite	L3L4	Alum/Poly	14"			
McCain	N	Alum/Poly	13-1/2"			
Split Vacuum Formed Louvered ABS- BK-45XX:						
Siemens/Eagle SG-Automatic	A	Poly	13-1/2"			
Peek/TCT	C	Alum	13-1/2"			
Siemens/EagleSA	E	Poly	14"			
Siemens/Mark IV	F	Alum	13-1/2"			
Econolite	L3L4	Alum/Poly	14"			
McCain	N	Alum/Poly	13-1/2"			

Note: 1. See pages T10-1 thru 8 for AeroFlex backplates.
2. See pages T10-9 thru 15 for Vacuum Formed backplates.

PELCO PRODUCTS, INC.
ISO 9001 www.intlcert.com

Plumbizer Backplate Matrix

Signal Manufacturer	Suffix	Signal Mat'l	Signal Ht	3-Sec Plumbizer	4-Sec Plumbizer	4-Sec Plumbizer	5-Sec Cluster 17" CTC Plumbizer	3-Sec Hawk 17" CTC Plumbizer
AeroFlex Dual Durometer PVC- BK-8XXX:								
Universal	N/A	Alum/Poly	13-1/2"/14"	N/A	N/A	N/A	BK-8005-17	BK-8003-17
Siemens/Eagle SG-Automatic	EagleSG	Poly	13-1/2"	BK-8101-3	BK-8101-4	BK-8101-5	BK-8105-17	
Peek/TCT	PeekTCT	Alum	13-1/2"	BK-8101-3	BK-8101-4	BK-8101-5		
Siemens/Eagle SA	EagleSA	Poly	14"					
Siemens/Mark IV		Alum	13-1/2"					
Econolite	Econolite	Alum/Poly	14"	BK-8101-3	BK-8101-4	BK-8101-5		
McCain	McCain	Alum/Poly	13-1/2"	BK-8101-3	BK-8101-4	BK-8101-5	BK-8105-17	
Vacuum Formed ABS- BK-10XX:								
Siemens/Eagle SG-Automatic	A	Poly	13-1/2"	BK-1013				
Peek/TCT	C	Alum	13-1/2"	BK-1013				
Siemens/Eagle SG	E	Poly	14"	BK-1013				BK-1034
Siemens/Mark IV	F	Alum	13-1/2"					
Econolite	L3L4	Alum/Poly	14"					
McCain	N	Alum/Poly	13-1/2"	BK-1013				
Vacuum Formed Louvered ABS- BK-50XX:								
Siemens/Eagle SG-Automatic	A	Poly	13-1/2"					
Peek/TCT	C	Alum	13-1/2"					
Siemens/Eagle SG	E	Poly	14"					
Siemens/Mark IV	F	Alum	13-1/2"					
Econolite	L3L4	Alum/Poly	14"					
McCain	N	Alum/Poly	13-1/2"					
Split Vacuum Formed- ABS BK-40XX:								
Siemens/Eagle SG-Automatic	A	Poly	13-1/2"					
Peek/TCT	C	Alum	13-1/2"					
Siemens/Eagle SG	E	Poly	14"					
Siemens/Mark IV	F	Alum	13-1/2"					
Econolite	L3L4	Alum/Poly	14"					
McCain	N	Alum/Poly	13-1/2"					
Split Vacuum Formed Louvered ABS- BK-45XX:								
Siemens/Eagle SG-Automatic	A	Poly	13-1/2"					
Peek/TCT	C	Alum	13-1/2"					
Siemens/EagleSG	E	Poly	14"					
Siemens/Mark IV	F	Alum	13-1/2"					
Econolite	I3L4	Alum/Poly	14"					
McCain	N	Alum/Poly	13-1/2"					

Note: 1. See pages T10-1 thru 8 for AeroFlex backplates.
2. See pages T10-9 thru 15 for Vacuum Formed backplates.

PELCO PRODUCTS, INC.
ISO 9001
www.intlcert.com

Combo Backplate Matrix

Signal Manufacturer	Suffix	Signal Mat'l	Signal Ht	2-3 Sec 16" CTC	12-12-8 Inline	12-8-8-8 Inline	12-12-8-8-8 Inline
AeroFlex Dual Durometer PVC- BK-8XXX:							
Universal	N/A	Alum/Poly	13-1/2"/14"	N/A			
Siemens/Eagle SG-Automatic	EagleSA	Poly	13-1/2"				
Peek/TCT	PeekTCT	Alum	13-1/2"	BK-8106			
Siemens/Eagle SA	EagleSA	Poly	14"				
Siemens/Mark IV		Alum	13-1/2"				
Econolite	Econolite	Alum/Poly	14"				
McCain	McCain	Alum/Poly	13-1/2"	BK-8106			
Vacuum Formed ABS- BK-10XX:							
Siemens/Eagle SG-Automatic	A	Poly	13-1/2"				
Peek/TCT	C	Alum	13-1/2"				
Siemens/Eagle SA	E	Poly	14"				BK-1014
Siemens/Mark IV	F	Alum	13-1/2"				
Econolite	L3L4	Alum/Poly	14"				
McCain	N	Alum/Poly	13-1/2"				
Vacuum Formed Louvered ABS- BK-50XX:							
Siemens/Eagle SG-Automatic	A	Poly	13-1/2"				
Peek/TCT	C	Alum	13-1/2"				
Siemens/Eagle SA	E	Poly	14"				
Siemens/Mark IV	F	Alum	13-1/2"				
Econolite	L3L4	Alum/Poly	14"				
McCain	N	Alum/Poly	13-1/2"				
Split Vacuum Formed- ABS BK-40XX:							
Siemens/Eagle SG-Automatic	A	Poly	13-1/2"				
Peek/TCT	C	Alum	13-1/2"				
Siemens/Eagle SA	E	Poly	14"				
Siemens/Mark IV	F	Alum	13-1/2"				
Econolite	L3L4	Alum/Poly	14"				
McCain	N	Alum/Poly	13-1/2"				
Split Vacuum Formed Louvered ABS- BK-45XX:							
Siemens/Eagle SG-Automatic	A	Poly	13-1/2"				
Peek/TCT	C	Alum	13-1/2"				
Siemens/EagleSA	E	Poly	14"				
Siemens/Mark IV	F	Alum	13-1/2"				
Econolite	L3L4	Alum/Poly	14"				
McCain	N	Alum/Poly	13-1/2"				

Note: 1. See pages T10-1 thru 8 for AeroFlex backplates.
2. See pages T10-9 thru 15 for Vacuum Formed backplates.

ISO 9001 www.intlcert.com

This page is intentionally left blank.

PELCO PRODUCTS, INC.
ISO 9001
www.intlcert.com

Pedestal Poles

Pelco offers aluminum, iron, and plastic bases in various sizes as well as poles in aluminum and steel. Pelco's cast aluminum square base is FHWA certified and meets or exceeds AASHTO break-away requirements. Plastic replacement doors offer an economical way to deter vandalism.

No Threads

Pedestal Pole, 4" Sch 40, Spun Alum No Threads

PB-5101 - Length [ ] - Coating [ ]

PNC=Process No Color
P_ _=Paint

4"-8NPT TOE

Pedestal Pole, 4"- 8 NPT Sch 40, Spun Alum w/ Pelican ID

PB-5100 - Length [ ] - Coating [ ]

PNC=Process No Color
P_ _=Paint

Pedestal Pole, 4"- 8 NPT Sch 80, Spun Alum

PB-5102 - Length [ ] - Coating [ ]

PNC=Process No Color
P_ _=Paint

Pedestal Pole, 4"- 8 NPT Sch 40, Steel

PB-5201 - Length [ ] - Coating [ ]

P_ _=Paint

Pedestal Pole, 4"- 8 NPT Sch 40, Galv Steel

PB-5200 - Length [ ] - GLV - Coating [ ]

Blank=Galvanized Only
P_ _=Paint over Galvanized

Welded 4"-8NPT TOE

Pedestal Pole, Welded, 4"- 8 NPT w/ 5-1/2" Nipple Length, Steel

PB-5219 - Length [ ] - Coating [ ]

GLV=Galvanized
P_ _=Paint

Note: 1. Standard poles are typically sold in 1 foot increments. For other lengths contact sales.
2. See Reference Section page v for available paint colors.

Pedestal Poles

Pelco offers aluminum, iron, and plastic bases in various sizes as well as poles in aluminum and steel. Pelco's cast aluminum square base is FHWA certified and meets or exceeds AASHTO break-away requirements. Plastic replacement doors offer an economical way to deter vandalism.

Pedestal Pole, 4"- 8 NPT Sch 80, Spun Alum Threaded Both Ends

PB-5107 - [Length] - [Coating]

PNC=Process No Color
P_ _=Paint

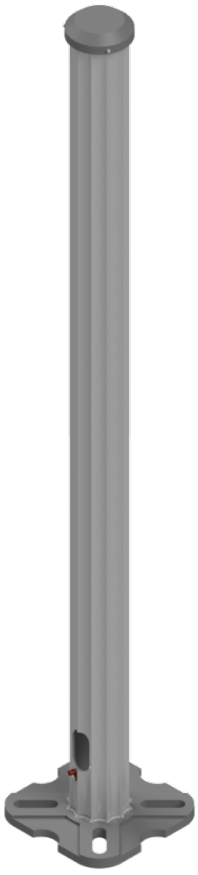

Pedestal Pole Assy, 4" Fluted, Alum 7.88"-13.00" Bolt Circle for 3/4" Anchor Bolts

PB-5235 - [Length] - [Coating]

Length:
10=10'-0"
12=12'-0"
13=13'-0"

Coating:
PNC=Process No Color
P_ _=Paint

Note:
Includes grounding lug & cap.

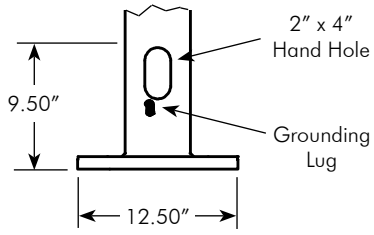

Note: 1. Standard poles are typically sold in 1 foot increments. For other lengths contact sales.
2. See Reference Section page v for available paint colors.

ISO 9001 www.intlcert.com

Square Pedestal Bases
Aluminum

Pelco offers aluminum, iron, and plastic bases in various sizes as well as poles in aluminum and steel. Pelco's PB-5334 and PB-5335 cast aluminum square bases are FHWA certified and meets or exceeds AASHTO break-away requirements. Plastic replacement doors offer an economical way to deter vandalism.

Square Base Assembly, Alum -12k Capacity w/ Alum Door

PB-5334 - [Door] - [Set Screws in Collar] - [Grounding Lug] - [Coating]

- Door: NL=No Logo; Blank=Pelco Logo
- Set Screws in Collar: 1S=1 Hex Bolt; 3S=3 Set Screws; Blank=None
- Grounding Lug: GL=Ground Lug; Blank=None
- Coating: PNC=Process No Color; P__=Paint

Square Base Assembly, Alum -12k Capacity w/ Plastic Door

PB-5335 - [Door] - [Set Screws in Collar] - [Grounding Lug] - PNC

- Door: NL=No Logo; Blank=Pelco Logo
- Set Screws in Collar: 1S=1 Hex Bolt; 3S=3 Set Screws; Blank=None
- Grounding Lug: GL=Ground Lug; Blank=None

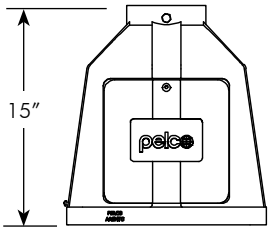

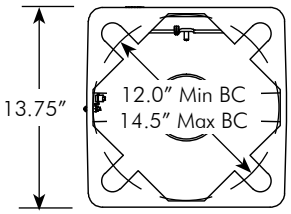

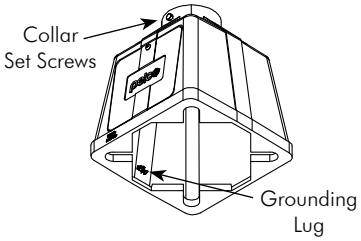

Note: 1. PB-5334 and PB-5335 aluminum square bases above are available with AASHTO certifications and FHWA approval.
2. All assemblies are supplied standard with stainless fasteners.
3. See Reference Section page v for available paint colors.

Square Pedestal Bases
Aluminum

Pelco offers aluminum, iron, and plastic bases in various sizes as well as poles in aluminum and steel. Pelco's PB-5334 and PB-5335 cast aluminum square bases are FHWA certified and meets or exceeds AASHTO break-away requirements. Plastic replacement doors offer an economical way to deter vandalism.

Square Base Assembly, Alum -18k Capacity Heat Treated w/ Alum Door

PB-5336 - [Door] - [Set Screws in Collar] - [Grounding Lug] - [Coating]

Door	Set Screws in Collar	Grounding Lug	Coating
NL=No Logo Blank=Pelco Logo	1S=1 Hex Bolt 3S=3 Set Screws Blank=None	GL=Ground Lug Blank=None	PNC=Process No Color P_ _=Paint

Square Base Assembly, Alum -18k Capacity Heat Treated w/ Plastic Door

PB-5337 - [Door] - [Set Screws in Collar] - [Grounding Lug] - PNC

Door	Set Screws in Collar	Grounding Lug
NL=No Logo Blank=Pelco Logo	1S=1 Hex Bolt 3S=3 Set Screws Blank=None	GL=Ground Lug Blank=None

Square Base Assembly, Alum Steel Coupling w/ Alum Door

PB-5340 - [Door] - [Set Screws in Collar] - [Grounding Lug] - [Coating]

Door	Set Screws in Collar	Grounding Lug	Coating
NL=No Logo Blank=Pelco Logo	1S=1 Hex Bolt 3S=3 Set Screws Blank=None	GL=Ground Lug Blank=None	PNC=Process No Color P_ _=Paint

Square Base Assembly, Alum Steel Coupling w/ Plastic Door

PB-5341 - [Door] - [Set Screws in Collar] - [Grounding Lug] - PNC

Door	Set Screws in Collar	Grounding Lug
NL=No Logo Blank=Pelco Logo	1S=1 Hex Bolt 3S=3 Set Screws Blank=None	GL=Ground Lug Blank=None

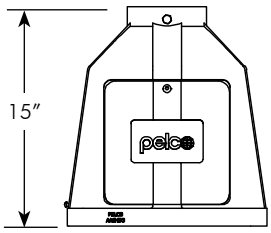

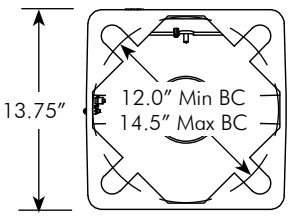

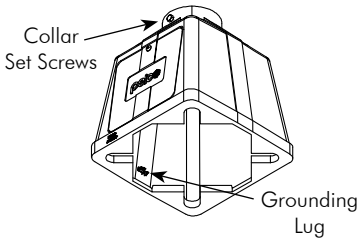

Note: 1. All assemblies are supplied standard with stainless fasteners.
2. See Reference Section page v for available paint colors.

ISO 9001 www.intlcert.com

Square Pedestal Bases
Aluminum

Pelco offers aluminum, iron, and plastic bases in various sizes as well as poles in aluminum and steel. Pelco's PB-5334 and PB-5335 cast aluminum square bases are FHWA certified and meets or exceeds AASHTO break-away requirements. Plastic replacement doors offer an economical way to deter vandalism.

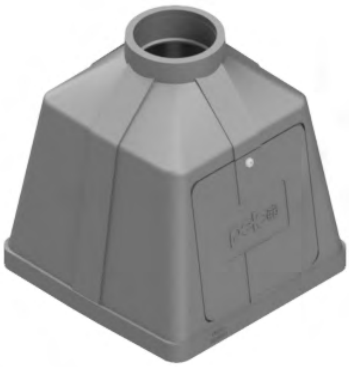

Square Base Assembly, Alum Slip Fit w/ Alum Door

	Door		Grounding Lug		Coating
PB-5338 -	[ ]	-	[ ]	-	[ ]
	NL=No Logo Blank=Pelco Logo		GL=Ground Lug Blank=None		PNC=Process No Color P_ _=Paint

Square Base Assembly, Alum Slip Fit w/ Plastic Door

	Door		Grounding Lug	
PB-5339 -	[ ]	-	[ ]	- PNC
	NL=No Logo Blank=Pelco Logo		GL=Ground Lug Blank=None	

Note:
Poles must be welded to base in the field.

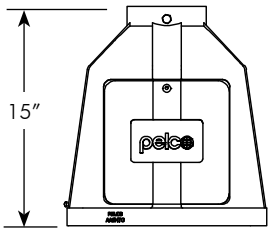

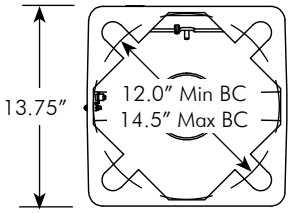

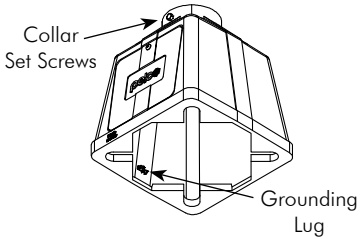

Note: 1. All assemblies are supplied standard with stainless fasteners.
2. See Reference Section v page for available paint colors.

Square Pedestal Bases
Iron

Pelco offers aluminum, iron, and plastic bases in various sizes as well as poles in aluminum and steel. Pelco's PB-5334 and PB-5335 cast aluminum square bases are FHWA certified and meets or exceeds AASHTO break-away requirements. Plastic replacement doors offer an economical way to deter vandalism.

Square Base Assembly, Iron w/ Iron Door

	Set Screws in Collar		Grounding Lug		Coating
PB-5308 -	[ ]	-	[ ]	-	[ ]
	1S=1 Hex Bolt 3S=3 Set Screws Blank=None		GL=Grounding Lug Blank=None		GLV=Galvanized P_ _=Paint

Square Base Assembly, Iron w/ Iron Door

	Set Screws in Collar		Grounding Lug		Coating
PB-5511 -	[ ]	-	[ ]	-	[ ]
	1S=1 Hex Bolt 3S=3 Set Screws Blank=None		GL=Grounding Lug Blank=None		GLV=Galvanized P_ _=Paint

Note:
"Buy American" Certification available upon request at time of order.

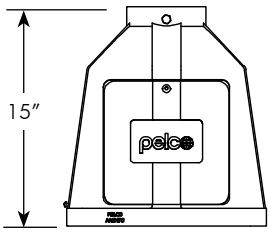

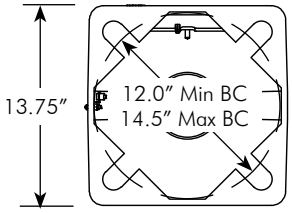

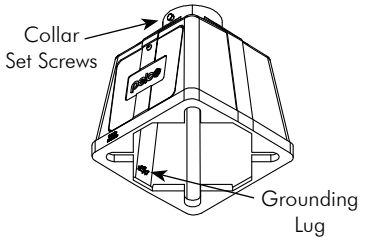

Note: 1. All assemblies are supplied standard with stainless fasteners.
2. See Reference Section v page for available paint colors.

ISO 9001
www.intlcert.com

Octagonal Pedestal Bases
Aluminum

Pelco offers aluminum, iron, and plastic bases in various sizes as well as poles in aluminum and steel. Pelco's PB-5334 and PB-5335 cast aluminum square bases are FHWA certified and meets or exceeds AASHTO break-away requirements. Plastic replacement doors offer an economical way to deter vandalism.

Octagonal Base Assembly, Alum w/ Alum Door

PB-5349 - [ ] - [ ] - [ ]

Set Screws in Collar	Grounding Lug	Coating
1S=1 Hex Bolt 4S=4 Set Screws Blank=None	GL=Grounding Lug Blank=None	PNC=Process No Color P_ _=Paint

Octagonal Base Assembly, Alum Slip Fit w/ Alum Door

PB-5350 - [ ] - [ ]

Grounding Lug	Coating
GL=Grounding Lug Blank=None	PNC=Process No Color P_ _=Paint

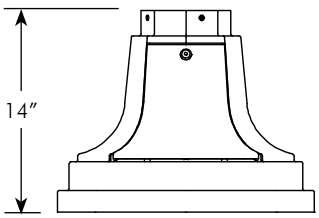

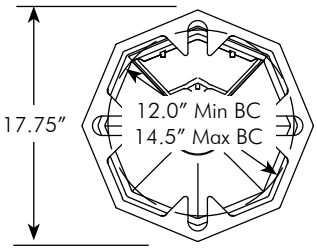

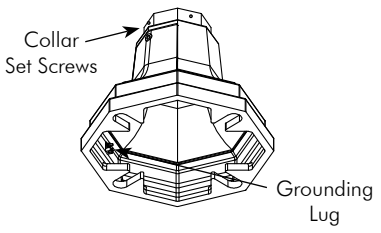

Note: 1. All assemblies are supplied standard with stainless fasteners.
2. See Reference Section v page for available paint colors.

Octagonal Pedestal Bases
Iron

Pelco offers aluminum, iron, and plastic bases in various sizes as well as poles in aluminum and steel. Pelco's PB-5334 and PB-5335 cast aluminum square bases are FHWA certified and meets or exceeds AASHTO break-away requirements. Plastic replacement doors offer an economical way to deter vandalism.

Octagonal Base Assembly, Iron w/ Iron Door

	Set Screws in Collar		Grounding Lug		Coating
PB-5310	- ☐	-	☐	-	☐
	1S=1 Hex Bolt 4S=4 Set Screws Blank=None		GL=Grounding Lug Blank=None		GLV=Galvanized P_ _=Paint

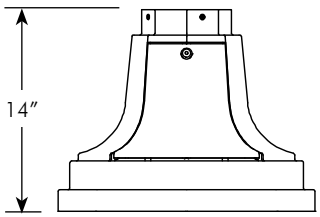

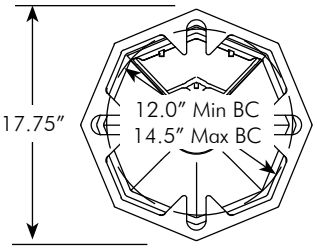

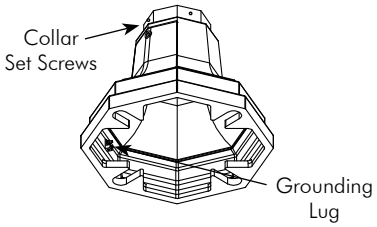

Note: 1. All assemblies are supplied standard with stainless fasteners.
2. See Reference Section v page for available paint colors.

ISO 9001
www.intlcert.com

Pedestal Bases

Pelco offers aluminum, iron, and plastic bases in various sizes as well as poles in aluminum and steel. Pelco's PB-5334 and PB-5335 cast aluminum square bases are FHWA certified and meets or exceeds AASHTO break-away requirements. Plastic replacement doors offer an economical way to deter vandalism.

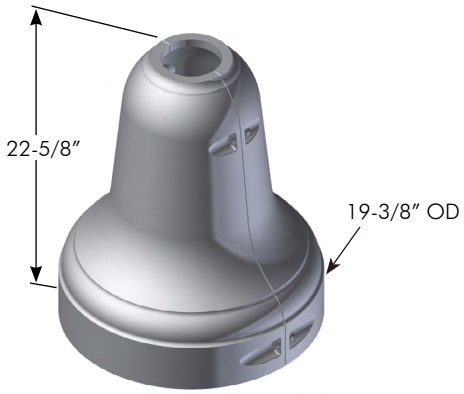

2-Piece Base for 4-1/2" OD Pole, Plastic

PB-5303-PNC

Note:
High Density Crosslinkable Polyethylene Pedestal Pole Base.
Complete with all hardware. No anchor bolts required.

2-Piece Reducer, Alum

PB-5328-PNC

Note:
2-Piece Aluminum Reducer for PB-5303-PNC Base. (Reduces 4-1/2" OD to 3-1/2" OD)

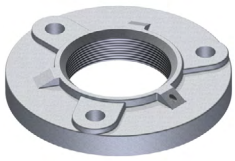

Flange Base, 4"-8NPT, Galv Iron

PB-5304-GLV

Note:
Three 13/16" mounting holes on 7-1/4" bolt circle.

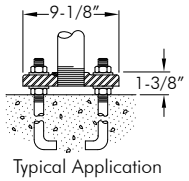

Typical Application

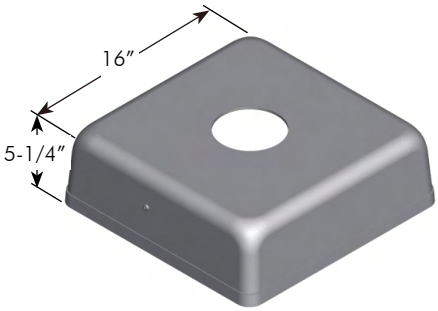

2-Piece Square Cover, Alum

PB-5399 - [Pole Diameter] - [Coating]

Pole Diameter: 4.5=4.5" OD, 8=8" OD

Coating: PNC=Process No Color, P__=Paint

Note:
For 4-1/2" - 8" OD Pole (15" Max. Bottom Opening). Complete with all hardware.

Note: 1. All assemblies are supplied standard with stainless fasteners.
2. See Reference Section v page for available paint colors.

Transformer Bases

Pelco's Transformer bases stand 17" tall and comes complete with an aluminum Pelco door, latch, and 8 heavy duty galvanized steel washers. A transformer base hardware kit is optional.

Transformer Base , TB2-17, Alum w/ Pelco Door & Galvanized Washers

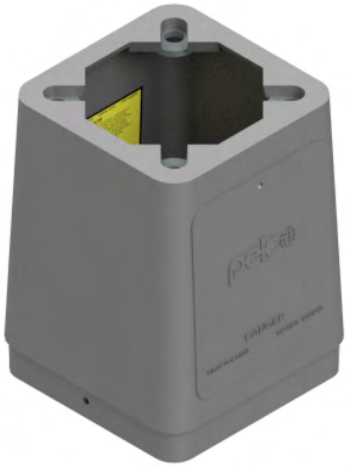

PB-5514 - [ ] - [ ]

Hardware Kit: Blank=None, HK=Hardware Kit

Coating: PNC=Process No Color, P_ _=Paint

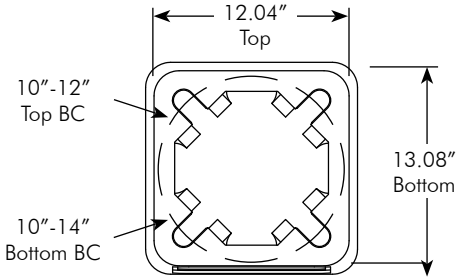

Transformer Base , TB1-17, Alum w/ Pelco Door & Galvanized Washers

PB-5517 - [ ] - [ ]

Hardware Kit: Blank=None, HK=Hardware Kit

Coating: PNC=Process No Color, P_ _=Paint

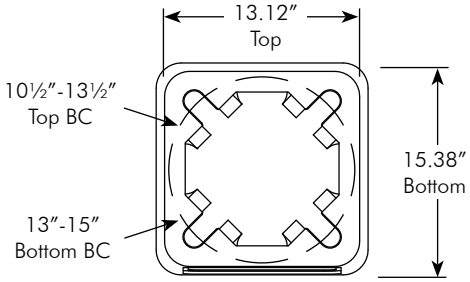

Note: 1. Hardware kits are galvanized steel.
2. See Reference Section v page for available paint colors.

ISO 9001 www.intlcert.com

Transformer Bases

Pelco's Transformer bases stand 17" tall and comes complete with an aluminum Pelco door, latch, and 8 heavy duty galvanized steel washers. A transformer base hardware kit is optional.

Transformer Base , TB1-17 Modified, Alum w/ Pelco Door & Galvanized Washers

PB-5538 - [Hardware Kit] - [Coating]

Hardware Kit: Blank=None, HK=Hardware Kit

Coating: PNC=Process No Color, P_ _=Paint

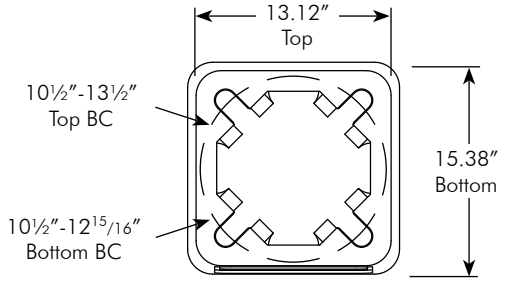

Door w/ Latch, Transformer Base, Alum For TB1-17, TB2-17, & TB3-17 Base

PB-0686- [Coating]

PNC=Process No Color, P_ _=Paint

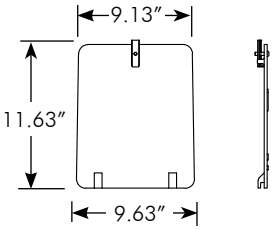

Note:
For plastic replacement door see PB-0522-16 on page T11-21.

Hardware Kit , Transformer Base 1"-8NC x 4", Set of 4, Galvanized

PB-5437-GLV

Note:
For mounting base plates to the top ofTransformer Bases.
Includes 4 Hex Head Bolts, 8 Washers, 4 Lock Washers, and 4 Hex Nuts.

Note: 1. Hardware kits are galvanized steel.
2. See Reference Section v page for available paint colors.

Pole & Arm Caps

Pelco offers pole and arm caps in various sizes in both aluminum and steel. Caps for 4-1/2" OD posts are available in aluminum and ABS plastic.

Pole Cap, Acorn Type, Alum

Diameter Range:	Part No:
3"	PB-5403 - Coating [ ]
3-1/2"	PB-5407 - [ ]
4-1/2"	PB-5401- [ ]

PNC=Process No Color
P_ _=Paint

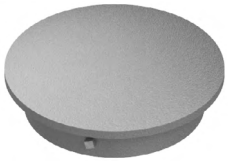

Pole Cap, Dome Type, Alum, 4-1/2" OD Pole

PB-5402 - Coating [ ]

PNC=Process No Color
P_ _=Paint

Note: 1. All assemblies are supplied standard with stainless fasteners.
2. See Reference Section v page for available paint colors.

PELCO PRODUCTS, INC.
ISO 9001
www.intlcert.com

Pole & Arm Caps

Pelco offers pole and arm caps in various sizes in both aluminum and steel. Caps for 4-1/2" OD posts are available in aluminum and ABS plastic.

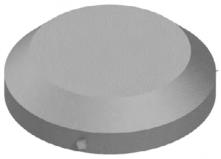

Pole & Arm Cap, Alum

Diameter Range:	Part No:
2-5/16" to 3-1/2"	AP-0101 - Coating [ ]
3" to 4"	AP-0102 - [ ]
4-3/16" to 5-3/16"	AP-0103 - [ ]
5-3/16" to 6-3/16"	AP-0104 - [ ]
6-1/8" to 7-1/8"	AP-0105 - [ ]
7-3/16" to 8-1/4"	AP-0106 - [ ]
8-3/16" to 9-3/16"	AP-0107 - [ ]
9-7/16" to 10-7/16"	AP-0108 - [ ]

PNC=Process No Color
P_ _=Paint

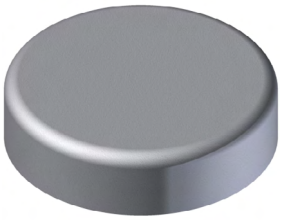

Pole & Arm Cap, Alum

Diameter Range:	Part No:
10-11/16" to 11-11/16"	AP-0109 - Coating [ ]
11-7/8" to 12-11/16"	AP-0110 - [ ]

PNC=Process No Color
P_ _=Paint

Note: 1. All assemblies are supplied standard with stainless fasteners.
2. See Reference Section v page for available paint colors.

Pole & Arm Caps

Pelco offers pole and arm caps in various sizes in both aluminum and steel. Caps for 4-1/2″ OD posts are available in aluminum and ABS plastic.

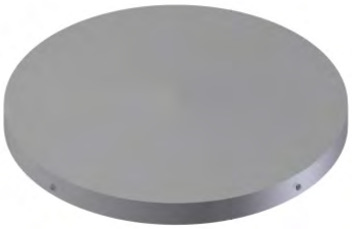

Pole Cap, Steel

AP-0450 - [Pole Diameter] - [Coating]

Pole Diameter: See Table

Coating: P_ _=Paint

Pole Dia.	Diameter Range
13.25	12.57″-13.38″ OD
14.25	13.39″-14.38″ OD
15.25	14.39″-15.38″ OD
16.25	15.39″-16.38″ OD
17.25	16.39″-17.38″ OD
18.25	17.39″-18.38″ OD
19.25	18.39″-19.38″ OD
20.25	19.39″-20.38″ OD
21.25	20.39″-21.38″ OD
22.25	21.39″-22.38″ OD
23.25	22.39″-23.38″ OD
24.25	23.39″-24.38″ OD

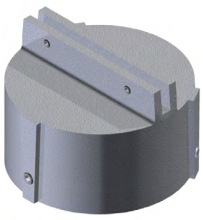

Post Cap for Sign Blade, Alum

Diameter Range:	Sign Blade	Part No:
4-1/2″ OD	**Extruded**	SH-1608 - [Coating]
4-1/2″ OD	**Flat**	SH-1615 - [ ]

PNC=Process No Color
P_ _=Paint

Pole Cap, ABS Plastic

Diameter Range:	Part No:
Up to 4″ OD	AP-0805-PNC
Up to 5″ OD	AP-0806-PNC

Note: 1. All assemblies are supplied standard with stainless fasteners.
2. Specify options when ordering.
3. See Reference Section v page for available paint colors.

Collars & Adapters

Pole and base collar assemblies, for both square and octagonal bases, are available in highwind areas to add strength and help prevent loosening of connection.

Pole & Base Collar Assembly, Alum Square Base

PB-5325 - [ ] Coating

PNC=Process No Color
P_ _=Paint

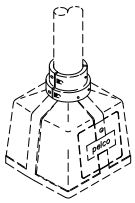

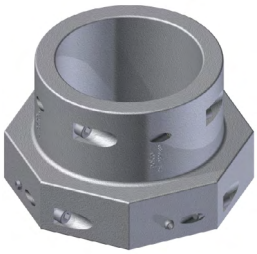

Pole & Base Collar Assembly, Alum Octagonal Base

PB-5326 - [ ] Coating

PNC=Process No Color
P_ _=Paint

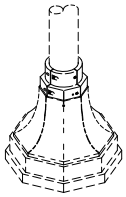

Pedestal Adapter, 4" (4-1/2" OD Pole), Alum 6-1/2" Bolt Circle

SE-3104 - [ ] Coating

PNC=Process No Color
P_ _=Paint

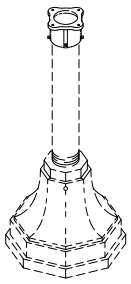

Note: 1. All assemblies are supplied standard with stainless steel fasteners.
2. Specify options when ordering.
3. See Reference Section v page for available paint colors.

Anchor Bolt Sets

Pelco's galvanized anchor bolt sets are available in a variety of sizes.

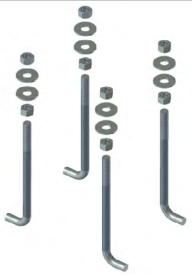

Anchor Bolt Set of 4 w/ Hardware 1/2"-13NC x 7-1/2", Galv

AP-1046-GLV

Note: Includes 4 Bolts, 8 Washers, and 8 Nuts.

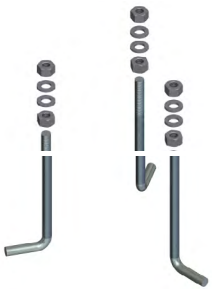

Anchor Bolt Set of 3 w/Hardware 3/4"-10NC x 18", Galv

PB-5305-GLV

Note: Includes 3 Bolts, 6 Washers and 6 Nuts.

Anchor Bolt Set of 4 w/ Hardware 3/4"-10NC x 18", Galv

PB-5306-GLV
Note: Includes 4 each: Bolts, Washers and Nuts.

PB-5518-GLV
Note: Includes 4 Bolts, 8 Washers and 8 Nuts.

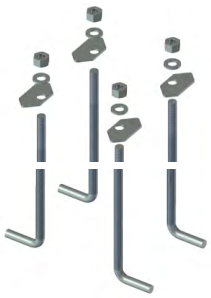

Anchor Bolt Set of 4 w/ Plate Washers 3/4"-10NC x 18", Galv

PB-5371-GLV

Includes 4 Bolts, 4 Plate Washers, 4 Washers, and 4 Nuts.

Anchor Bolt Set of 4 w/ Hardware 1"-8NC x 36", Galv

AP-1007- [ ] -GLV

Template

1=12" Bolt Circle
2=12.75" Bolt Circle
3=11" Bolt Circle

Includes 4 Bolts, 4 Lock Washers, 8 Washers, and 8 Nuts.

Note: 1. All assemblies are supplied standard with galvanized fasteners.

ISO 9001
www.intlcert.com

Anchor Bolt Cages

Anchor bolt cages allow the critical bolt circle dimensions to be maintained when the steel is cast into the concrete. These cages may be used instead of anchor bolt sets.

Anchor Bolt Cage, Galv
1/2"-13NC x 7-1/2" w/ 36" Rebar
5-1/2" Bolt Circle

AP-1049-GLV

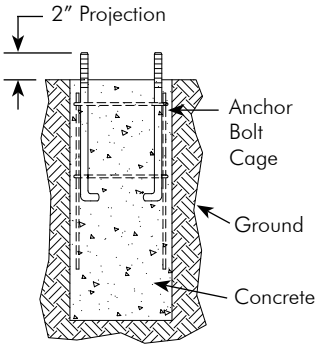

Typical Footing Detail

Anchor Bolt Cage, Galv
3/4"-10NC x 18" w/ 36" Rebar
8-1/2" Bolt Circle

AP-1089-GLV

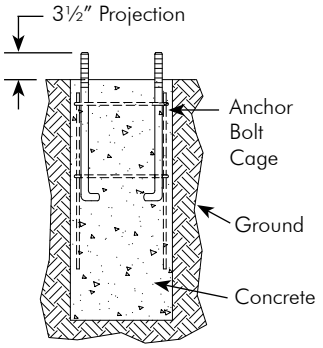

Typical Footing Detail

Anchor Bolt Cage, Galv
3/4"-10NC x 18" w/ 36" Rebar
13" Bolt Circle

AP-1095-GLV

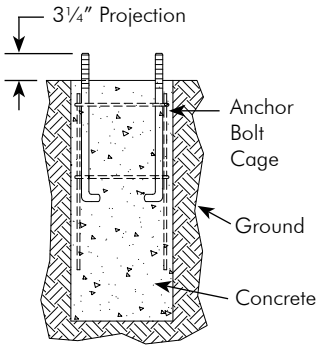

Typical Footing Detail

Note: 1. All assemblies are supplied standard with galvanized fasteners.
2. Footing shall be determined by end user.

Anchor Bolt Cages

Anchor bolt cages allow the critical bolt circle dimensions to be maintained when the steel is cast into the concrete. These cages may be used instead of anchor bolt sets.

Anchor Bolt Cage, Galv
1"-8NC x 36"
15" Bolt Circle

AP-3136-GLV

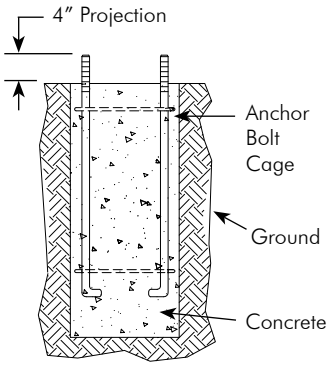

Typical Footing Detail

Anchor Bolt Cage, Galv
1"-8NC x 36"
11" Bolt Circle,

AP-3129-GLV

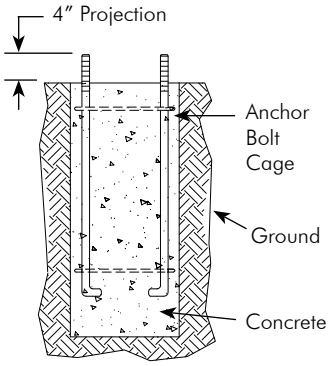

Typical Footing Detail

Note: 1. All assemblies are supplied standard with galvanized fasteners.
2. Footing shall be determined by end user.

Pole & Base Accessories

Pelco offers various accessories for pedestal bases from grounding lugs to plastic hand hole covers.

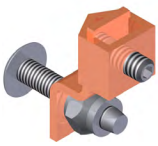

PB-5323-PNC **Grounding Lug w/ Mounting Hardware**

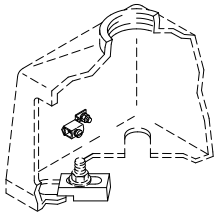

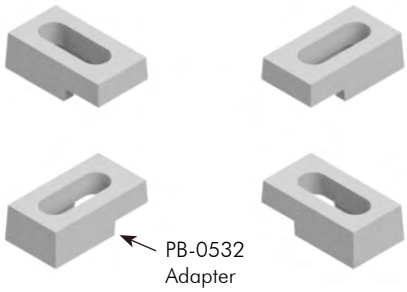

PB-5446-PNC **Anchor Bolt Adapter, Set of 4, Alum**

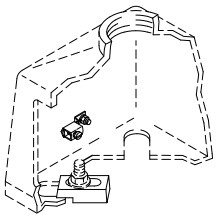

Note: Reduces minimum bolt circle on square pedestal base from 12" to 8-1/8" BC.

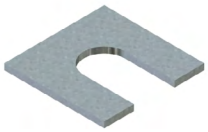

PB-0602-GLV **Shim, 1/16" x 2" x 2", Steel, Galv**

PB-0603-GLV **Shim, 1/8" x 2" x 2", Steel, Galv**

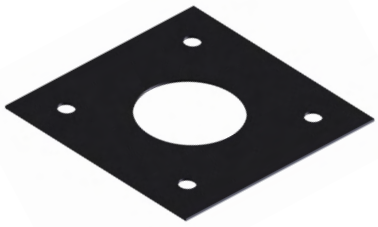

PB-0550-PNC **Template, ABS Plastic 13" Bolt Circle for Square and Octagonal Bases**

PB-5356-PNC **Universal Hand Hole Cover, ABS Plastic fits 2-3/4" x 4-1/2" to 5" x 8"**

Note: 1. All assemblies are supplied standard with stainless steel fasteners.
2. Specify options when ordering.

Plastic Replacement Doors

Plastic replacement doors for lighting pole bases are fabricated from tough hi-density UV inhibited plastic which offers excellent impact resistance. They give the appearance of aluminum, never require paint, and are a significant deterrent to vandalism since they have no scrap value. Pelco's doors withstand temperature extremes of -78° to +150° fahrenheit.

Door Assy, Plastic
Flat w/ Latch on Top

PB-0522-08-PNC

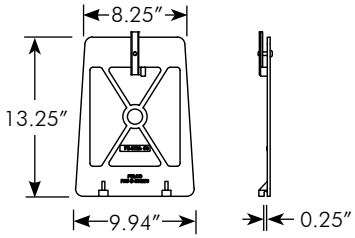

Door Assy, Plastic
Curved w/ Latch on Top

PB-0522-09-PNC

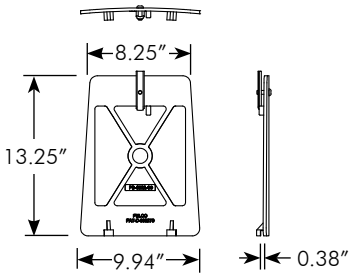

Door Assy, Plastic
Flat w/ Latch on Bottom

PB-0522-10-PNC

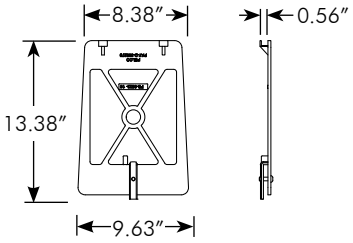

Door Assy, Plastic
Flat Short w/ Latch on Top

PB-0522-11-PNC

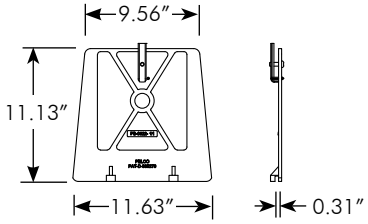

Note: 1. All assemblies are supplied standard with stainless fasteners.
2. Doors with latches include aluminum latch and vandal-resistant hardware.

ISO 9001
www.intlcert.com

Plastic Replacement Doors

Plastic replacement doors for lighting pole bases are fabricated from tough hi-density UV inhibited plastic which offers excellent impact resistance. They give the appearance of aluminum, never require paint, and are a significant deterrent to vandalism since they have no scrap value. Pelco's doors withstand temperature extremes of -78° to +150° fahrenheit.

Door Assy, Plastic
Curved Small w/ Latch on Top

PB-0522-14-PNC

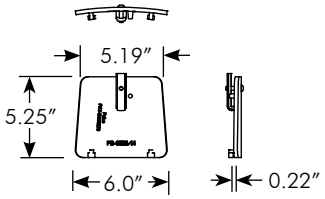

Door Assy, Plastic
Flat w/ Latch on Top

PB-0522-15-PNC

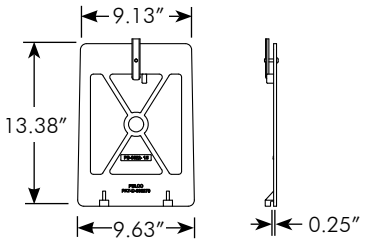

Door Assy, Plastic
Flat Short w/ Latch on Top

PB-0522-16-PNC

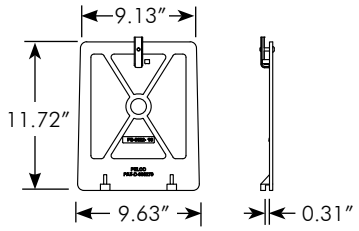

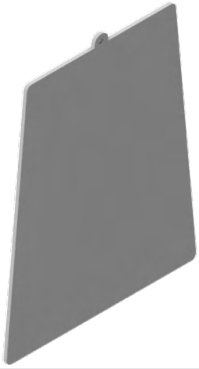

Door Assy, Plastic
Flat Short w/Tab on Top, No Latch

PB-0522-19-PNC

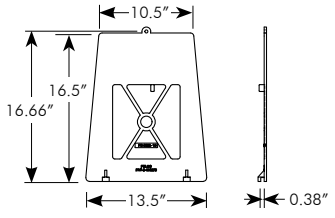

Note: 1. All assemblies are supplied standard with stainless fasteners.
2. Doors with latches include aluminum latch and vandal-resistant hardware.

This page is intentionally left blank.

PELCO PRODUCTS, INC.

ISO 9001
www.intlcert.com

Ornamental Pole Top & Bases

Pelco's decorative pole top and bases make the traffic signal aesthetically pleasing to the eye. In addition to the standar 4-piece, Pelco also manufactures the bases with an easy access door. Available for various pole diameters and with multiple finish options.

Ornamental Pole Top, Cast Alum, 5-1/4" - 24-1/4" Diameter Pole (36" in Height)

PB-5315 - [Cap Size] - [Trim Color] - [Coating]

- Cap Size: 5.25 thru 24.25
- Trim Color: T_ _=Paint
- Coating: PNC=Process No Color; P_ _=Paint

Note:
Cap Size available in 1" increments.

Ornamental Pole Base, 4-Piece Cast Alum, 8" - 12" Diameter Pole (27" Footprint)

PB-5354 - [Pole Diameter] - [Trim Color] - [Coating]

- Pole Diameter: 8.00 thru 12.00
- Trim Color: T_ _=Paint
- Coating: PNC=Process No Color; P_ _=Paint

Ornamental Pole Base, 4-Piece Cast Alum, 12" - 15" Diameter Pole (30" Footprint)

PB-5355 - [Pole Diameter] - [Trim Color] - [Coating]

- Pole Diameter: 12.00 thru 15.00
- Trim Color: T_ _=Paint
- Coating: PNC=Process No Color; P_ _=Paint

Ornamental Pole Base, 4-Piece Cast Alum, 10" - 26" Diameter Pole (40" Footprint)

PB-5381 - [Pole Diameter] - [Trim Color] - [Coating]

- Pole Diameter: 10.00 thru 26.00
- Trim Color: T_ _=Paint
- Coating: PNC=Process No Color; P_ _=Paint

Note: 1. All assemblies are supplied standard with stainless hardware.
2. See Reference Section page v for available paint colors.

ISO 9001 www.intlcert.com

Ornamental Pole Top & Bases

Pelco's decorative pole top and bases make the traffic signal aesthetically pleasing to the eye. In addition to the standard 4-piece, Pelco also manufactures the bases with an easy access door. Available for various pole diameters and with multiple finish options.

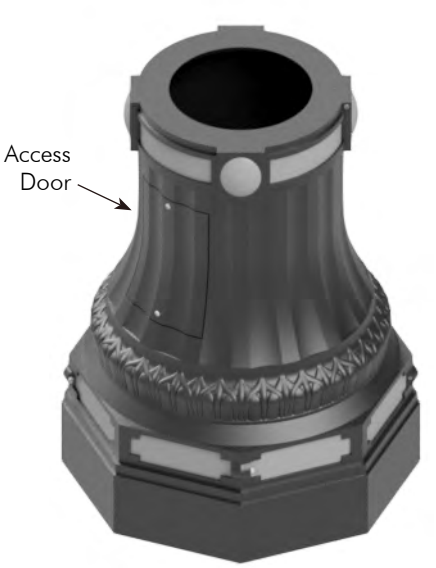

Ornamental Pole Base w/ Access Door, 4-Piece Cast Alum, 8" - 12" Diameter Pole (27" Footprint)

PB-5509 - [Pole Diameter] - [Trim Color] - [Coating]

- Pole Diameter: 8.00 thru 12.00
- Trim Color: T_ _=Paint
- Coating: PNC=Process No Color; P_ _=Paint

Ornamental Pole Base w/ Access Door, 4-Piece Cast Alum, 12" - 15" Diameter Pole (30" Footprint)

PB-5510 - [Pole Diameter] - [Trim Color] - [Coating]

- Pole Diameter: 12.00 thru 15.00
- Trim Color: T_ _=Paint
- Coating: PNC=Process No Color; P_ _=Paint

Ornamental Pole Base w/ Access Door, 4-Piece Cast Alum, 10" - 26" Diameter Pole (40" Footprint)

PB-5519 - [Pole Diameter] - [Trim Color] - [Coating]

- Pole Diameter: 10.00 thru 26.00
- Trim Color: T_ _=Paint
- Coating: PNC=Process No Color; P_ _=Paint

Note: 1. All assemblies are supplied standard with stainless hardware.
2. See Reference Section page v for available paint colors.

Pole & Arm Clamps

Pelco's strain pole clamps are available in various sizes and configurations from 1-way to 4-way. All clamps are hot dip galvanized per ASTM A123.

Strain Pole Clamp Assy, 1-Way, Steel

Diameter Range:	5-1/2" to 7-1/2"	7-1/2" to 10-1/2"	10-1/2" to 13-1/2"	13-1/2" to 16-1/2"
Part No.:	AP-1052-GLV	AP-1003-GLV	AP-1051-GLV	AP-1151-GLV

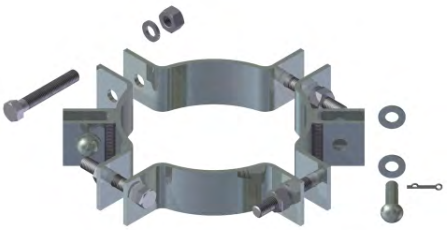

Strain Pole Clamp Assy, 2-Way, Steel

Diameter Range:	5-1/2" to 7-1/2"	7-1/2" to 10-1/2"	10-1/2" to 13-1/2"	13-1/2" to 16-1/2"
Part No.:	AP-1115-GLV	AP-1004-GLV	AP-1113-GLV	AP-1152-GLV

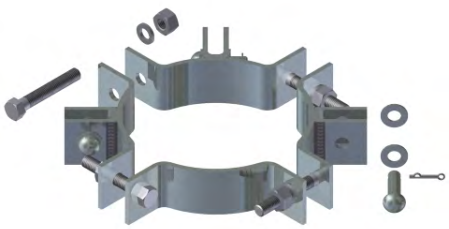

Strain Pole Clamp Assy, 3-Way, Steel

Diameter Range:	5-1/2" to 7-1/2"	7-1/2" to 10-1/2"	10-1/2" to 13-1/2"	13-1/2" to 16-1/2"
Part No.:	-	AP-1005-GLV	-	-

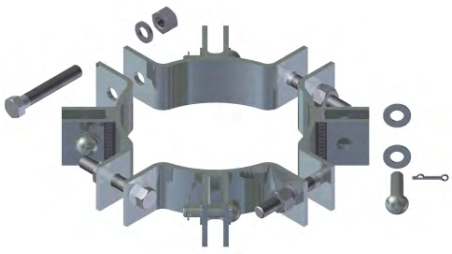

Strain Pole Clamp Assy, 4-Way, Steel

Diameter Range:	5-1/2" to 7-1/2"	7-1/2" to 10-1/2"	10-1/2" to 13-1/2"	13-1/2" to 16-1/2"
Part No.:	AP-1114-GLV	AP-1006-GLV	-	AP-1154-GLV

Note: All assemblies are supplied standard with galvanized hardware.

Pole & Arm Clamps

Pelco's strain pole clamps are available in various sizes and configurations from 1-way to 4-way. All clamps are hot dip galvanized per ASTM A123.

Strain Pole Clamp Assy, 1-Way 2-Piece w/ Eyelet, Steel

Diameter Range:	**7-1/2" to 8-1/4"**	**8-1/4" to 8-3/4"**	**9" to 10"**	**10" to 11"**	**10-3/4" to 11-3/4"**	**12" to 13"**
Part No.:	AP-1053-GLV	AP-1054-GLV	AP-1055-GLV	AP-1056-GLV	AP-1072-GLV	AP-1057-GLV

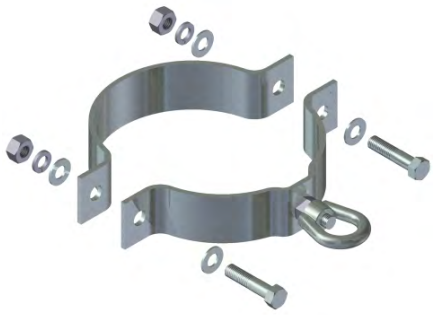

Strain Pole Clamp Assy, 2-Way 2-Piece w/ Eyelet, Steel

Diameter Range:	**7-1/2" to 8-1/4"**	**8-1/4" to 8-3/4"**	**9" to 10"**	**10" to 11"**	**10-3/4" to 11-3/4"**	**12" to 13"**
Part No.:	AP-1122-GLV	AP-1123-GLV	-	-	-	-

Note: All assemblies are supplied standard with galvanized hardware.

ISO 9001 www.intlcert.com

ITC Access Compartments

Pelco's ITC, Integral Terminal Compartment and Hand Hole, is an industry standard that has a low profile and unobstructed opening. The fold-out terminal plate provides for easier wiring access. Available with three terminal block options.

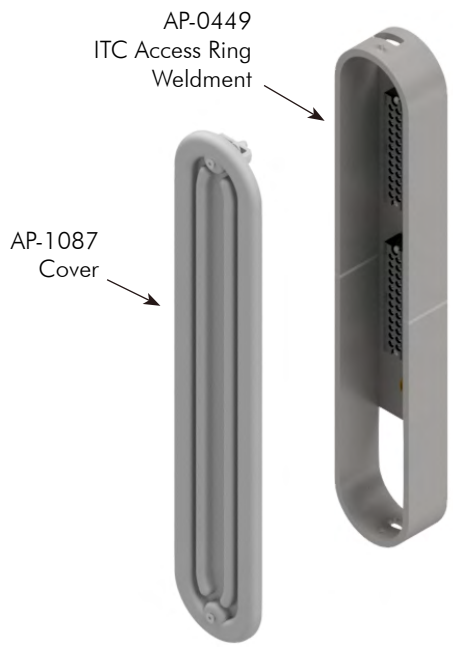

ITC Access Compartment w/ Door
3/8" x 4-3/4" x 27" w/ 12 Circuit

	Terminal Block		Double Fuse Block		Coating
AP-1083	- [ ]	-	[ ]	-	[ ]
	85A=Compression 65A=Compression 30A=Barrier Strip		Blank=None 3AF=3 Amp Fuse 10F=10 Amp Fuse		PNC=Process No Color P_ _=Paint

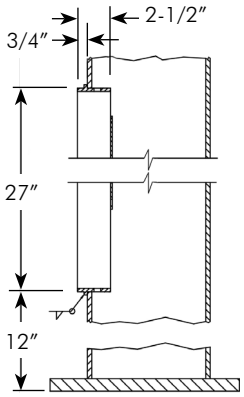

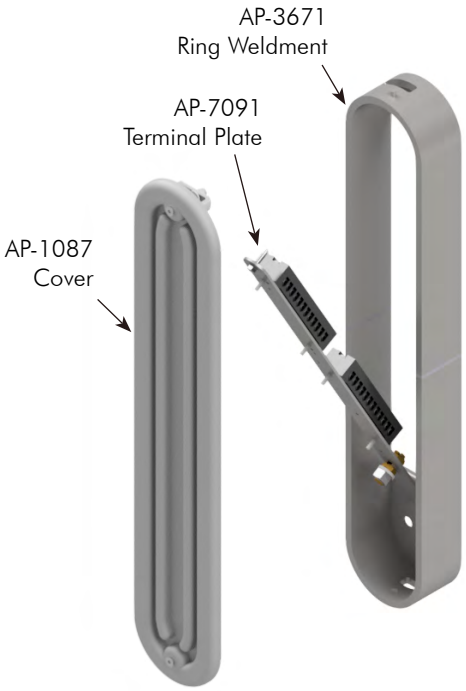

ITC Access Compartment w/ Door
Fold out Terminals
3/8" x 4-3/4" x 27" w/ 12 Circuit

	Terminal Block		Double Fuse Block		Coating
AP-1125	- [ ]	-	[ ]	-	[ ]
	85A=Compression 65A=Compression 30A=Barrier Strip		Blank=None 3AF=3 Amp Fuse 10F=10 Amp Fuse		PNC=Process No Color P_ _=Paint

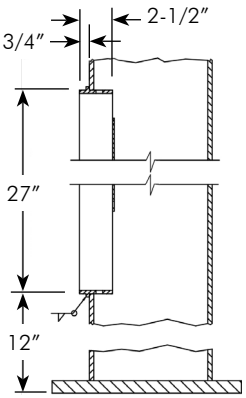

Note: 1. All assemblies are supplied standard with stainless steel fasteners.
2. See Reference Section page v for available paint colors.

ITC Access Compartments

Pelco's ITC, Integral Terminal Compartment and Hand Hole, is an industry standard that has a low profile and unobstructed opening. The fold-out terminal plate provides for easier wiring access. Available with three terminal block options.

AP-1087-PNC **ITC Cover Assembly, Vacuum formed ABS**

AP-1081-PNC **Double Fuse Block Kit, 600V, 3 Amp Fuse**

AP-1117-PNC **Double Fuse Block Kit, 600V, 10 Amp Fuse, Texas Spec**

Note: All assemblies are supplied standard with stainless steel fasteners.

ISO 9001 www.intlcert.com

ITC Access Compartments

Pelco's ITC, Integral Terminal Compartment and Hand Hole, is an industry standard that has a low profile and unobstructed opening. The fold-out terminal plate provides for easier wiring access. Available with three terminal block options.

AP-1082-PNC **Terminal Block Assy, 85 Amp, 600V Compression Terminal Block w/ Hardware and Copper Ground Connector**

Note:
Terminal block conductor range for 85 Amp compression block option is 1-#18 thru 4-#10 per screw.

AP-1065-PNC **Terminal Block Assy, 65 Amp, 600V Compression Terminal Block w/ Hardware and Copper Ground Connector**

Note:
Terminal block conductor range for 65 Amp compression block option is 1-#18 thru 3-#12 per screw.

AP-1074-PNC **Terminal Block Assy, 30 Amp, 300V Terminal Strip Barrier Type w/ Hardware and Copper Ground Connector**

Note: All assemblies are supplied standard with stainless steel fasteners.

This page is intentionally left blank.

Foundation Anchors

Pelco's foundation anchors feature a top plate which enables the bolt head to be inserted after the anchor is in place. This eliminates the neccessity of digging under the plate to install base bolts. Plate scrapers loosen the soil for easy bolt installation from top of the plate. The bolt is held by the plate scraper which prevents it from turning.

PB-5369-GLV **Foundation Anchor Assy, 3" Sch 40 x 4'-0" 4-1/2" to 6-1/2" Bolt Circle, 1/2"-13NC Hardware**

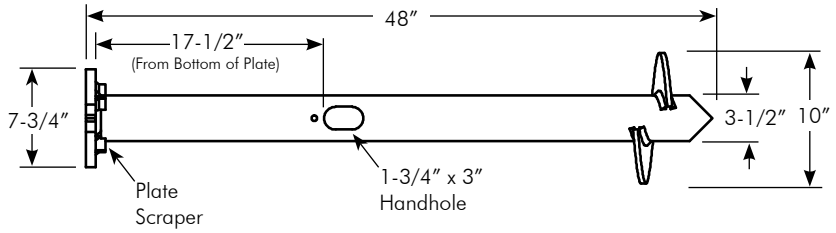

Note:
For residential, ornamental, and walkway lighting with small bases. (wt. 46 lbs.)

PB-5508-GLV **Foundation Anchor Assy, 3½" Sch 40 x 4'-0" 4-1/2" to 6-1/2" Bolt Circle, 1/2"-13NC Hardware**

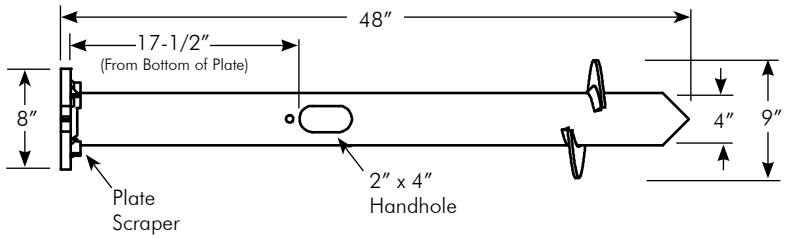

Note:
For residential, ornamental, and walkway lighting with small bases. (wt. 49 lbs.)

Note: 1. Foundation anchors are hot dip galvanized per ASTM A123.
2. All assemblies are supplied with Grade 5 Galvanized Bolts.
3. All assemblies with hardware are bagged in a nylon weatherproof bag.

Foundation Anchors

Pelco's foundation anchors feature a top plate which enables the bolt head to be inserted after the anchor is in place. This eliminates the neccessity of digging under the plate to install base bolts. Plate scrapers loosen the soil for easy bolt installation from top of the plate. The bolt is held by the plate scraper which prevents it from turning.

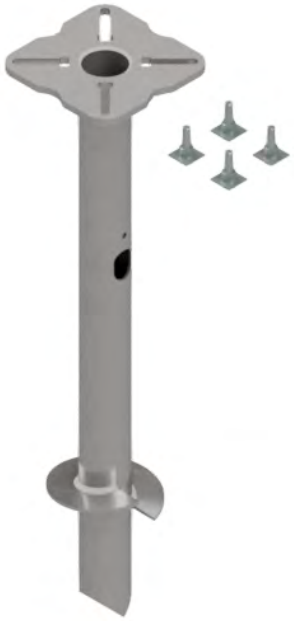

PB-5364-GLV **Foundation Anchor Assy, 4" Sch 40 x 4'-8"**
8-1/4" to 14-3/4" Bolt Circle
3/4"-10NC Hardware

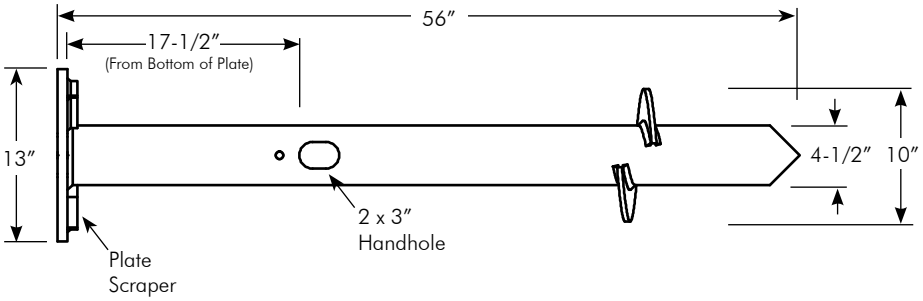

Note:
For residential lights, parking lots, and street lights. Typically for pole heights up to 16'. (wt. 94 lbs.)

Foundation Anchor Assy, 6" Sch 40 x Length
9" to 14" Bolt Circle
5/8"-11NC Hardware

PB-5550 - [Length: 84=7'-0"] - GLV

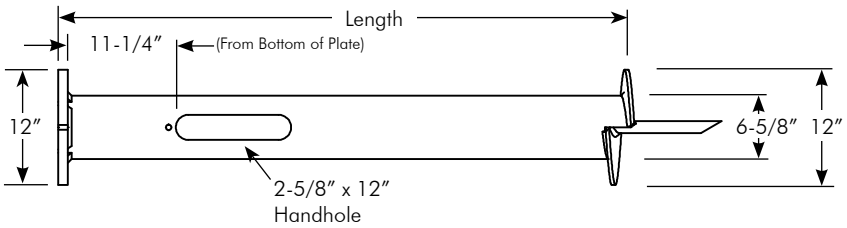

Note:
84" (wt. 172 lbs.)

Note: 1. Foundation anchors are hot dip galvanized per ASTM A123.
2. All assemblies are supplied with Grade 5 Galvanized Bolts.
3. All assemblies with hardware are bagged in a nylon weatherproof bag.

ISO 9001 www.intlcert.com

Foundation Anchors

Pelco's foundation anchors feature a top plate which enables the bolt head to be inserted after the anchor is in place. This eliminates the necessity of digging under the plate to install base bolts. Plate scrapers loosen the soil for easy bolt installation from top of the plate. The bolt is held by the plate scraper which prevents it from turning.

Foundation Anchor Assy, 6" Sch 40 x Length
9" to 14" Bolt Circle
1"-8NC Hardware

PB-5537 - [Length] - GLV

Length
48=4'-0"
60=5'-0"
72=6'-0"
84=7'-0"

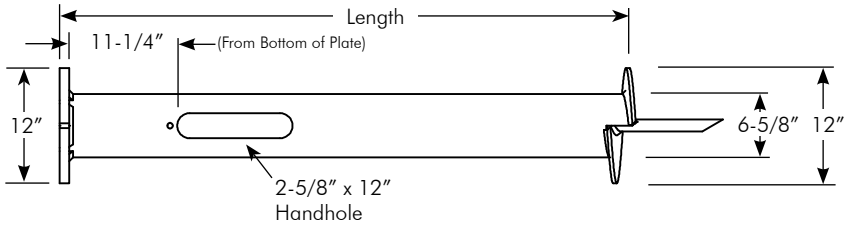

Note:
48' (wt. 115 lbs.); 60" (wt. 134 lbs.); 72" (wt. 152 lbs.); 84" (wt. 172 lbs.)

PB-5372-GLV **Foundation Anchor Assy, 6" Sch 40 x 5'-0"**
10" to 15" Bolt Circle
1"-8NC Hardware

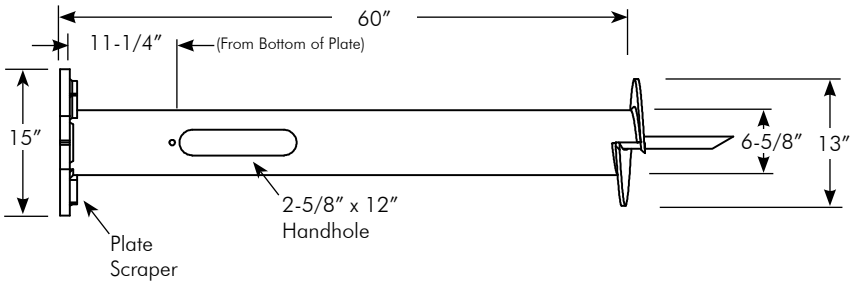

Note:
For residential lights, parking lots, etc. Typically for poles ranging from 20'-30' in height. (wt.167 lbs.)

Note: 1. Foundation anchors are hot dip galvanized per ASTM A123.
2. All assemblies are supplied with Grade 5 Galvanized Bolts.
3. All assemblies with hardware are bagged in a nylon weatherproof bag.

Foundation Anchors

Pelco's foundation anchors feature a top plate which enables the bolt head to be inserted after the anchor is in place. The carriage bolts, in the hardware kit, are locked in place by the slots in the top plate, preventing them from turning.

PB-5534-GLV **Foundation Anchor Assy, 8" Sch 20 x 5'-0"**
11" to 17" Bolt Circle
1"-8NC Hardware

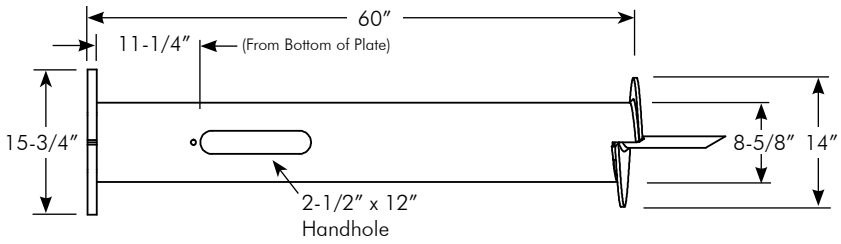

Note:
For street and highway lighting. Typically for poles ranging from 30'-50' in height. (wt.184 lbs.)

PB-5375-GLV **Foundation Anchor Assy, 8" Sch 40 x 5'-0"**
13" to 18" Bolt Circle
1-1/4"-7NC Hardware

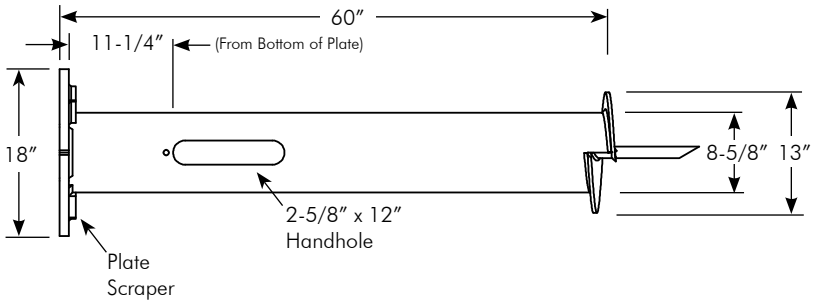

Note:
For street and highway lighting. Typically for poles ranging from 30'-50' in height. (wt. 239 lbs.)

Note: 1. Foundation anchors are hot dip galvanized per ASTM A123.
2. All assemblies are supplied with Grade 5 Galvanized Bolts.
3. All assemblies with hardware are bagged in a nylon weatherproof bag.

ISO 9001
www.intlcert.com

Foundation Anchors

Pelco's foundation anchors feature a top plate which enables the bolt head to be inserted after the anchor is in place. The carriage bolts, in the hardware kit, are locked in place by the slots in the top plate, preventing them from turning.

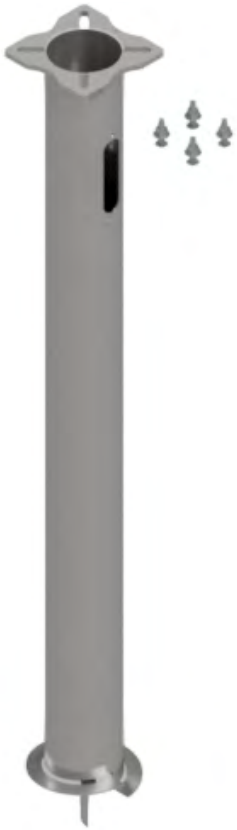

PB-5535-GLV **Foundation Anchor Assy, 10" Sch 20 x 10'-0"**
13-1/2" to 17" Bolt Circle
1"-8NC Hardware

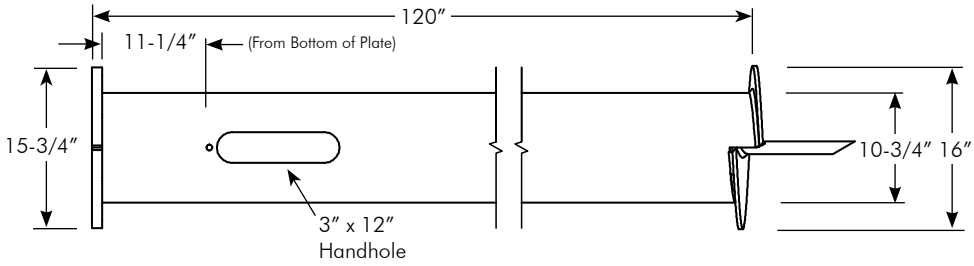

Note:
For street and highway lighting. Typically for poles ranging from 30'-50' in height. (wt. 359 lbs.)

SP-6360-GLV **Foundation Anchor Assy, 8" Sch 20 x 5'-0"**
8" to 11" Bolt Circle,
3/4"-10NC Hardware

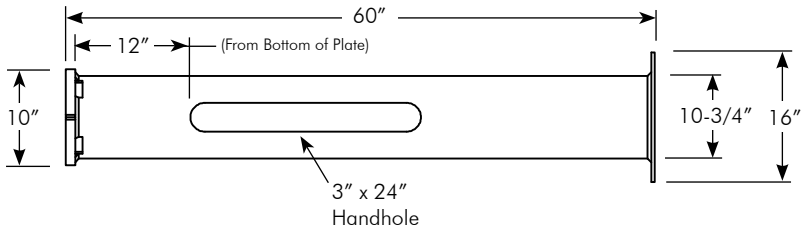

Note:
Designed to be stabilized in conrete footing. Typically for poles up to 30' in height. (wt. 141 lbs)

Note: 1. Foundation anchors are hot dip galvanized per ASTM A123.
2. All assemblies are supplied with Grade 5 Galvanized Bolts.
3. All assemblies with hardware are bagged in a nylon weatherproof bag.

Foundation Anchors

Various accessories are available to assist in installation of foundation anchors and anchor bolts.

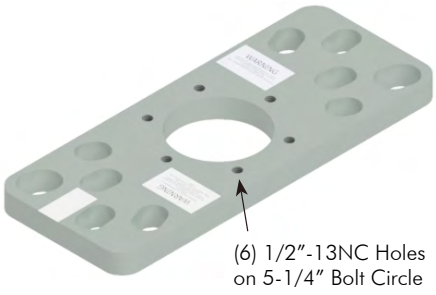

Driver Adapter for Foundation Anchor Steel

PB-0604-ZN1

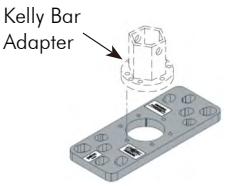

Note: Required to connect the Kelly Bar adapter (not supplied) to the foundation anchor for installation. Special slotted hole patterns permits installation of foundation anchors having bolt circle diameters of 9" to 14-3/4". Zinc 1 Finish.

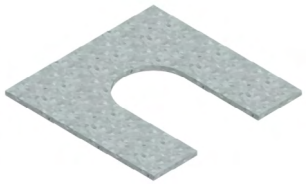

PB-0602-GLV **Shim, 1/16" x 2" x 2" Galvanized Steel**

PB-0603-GLV **Shim, 1/8" x 2" x 2" Galvanized Steel**

AP-3085-PNC **Anchor Bolt Template, ABS Plastic**

- Quick, easy set-up in minutes
- Bolt circle patterns of 7-1/2" to 24-1/2"
- Easy guide divots every 1/2"
- Reusable

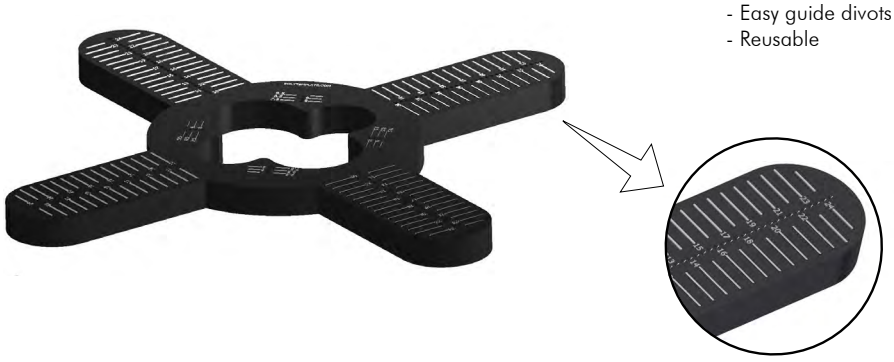

The Bolt Template is a reusable "tool" used for layout of bolts to be used in concrete for the future installation of poles. Constructed of UV stabilized ABS plastic, the Bolt Template may be used for various bolt patterns from 7-1/2" up to 24-1/2". Accepts multiple conduits through the center with the capacity for up to two 2" conduits and multiple smaller conduits at one time.

Note: See Section T11 for anchor bolt sets and cages.

GPL
Geometrically Programmed Louvers

The Pelco GPL is a precisely aimed and controlled traffic signal louvering system which is designed for quick easy installation. Drivers see a full circle of bright projected light when they are within the preset field of vision. The GPL is available without a visor or with a full circle visor that easily replaces the existing visor on most signals.

GPL, Geometrically Programmed Louver, 12" w/o Visor

GL-1001 - [View Angle] - PNC

View Angle:
7=7°
8=8°
9=9°
11=11°
13=13°
15=15°
23.5=23.5°
42=42°

Note:
Typical factory set view angle is 8°. Additional view angles can be achieved by relocating the baffles. See diagram on T13-2.

GPL, Geometrically Programmed Louver, 12" w/ Visor

GL-1010 - [View Angle] - [Mounting Clips] - [Coating]

View Angle:
07=7°
08=8°
09=9°
11=11°
13=13°
15=15°
23.5=23.5°
42=42°

Mounting Clips:
Blank=No Clips
UC=Universal Clips

Coating:
P_ _=Paint

Note:
1. Shown with universal clip option.
2. Typical factory set view angle is 8°. Additional view angles can be achieved by relocating the baffles. See diagram on T13-2.

Note: 1. All assemblies are supplied standard with stainless steel fasteners.
2. Universal Clips fit Eagle, Econolite, TCT, Mark IV, and McCain signals.
3. See Reference Section page v for available paint colors.

GPL View Angle Adjustments

The Pelco GPL is a precisely aimed and controlled traffic signal louvering system which is designed for quick easy installation. Drivers see a full circle of bright projected light when they are within the preset field of vision. The GPL is available without a visor or with a full circle visor that easily replaces the existing visor on most signals.

GPL Baffle Locations 1 thru 11

(for other than standard factory set 8° view angle)

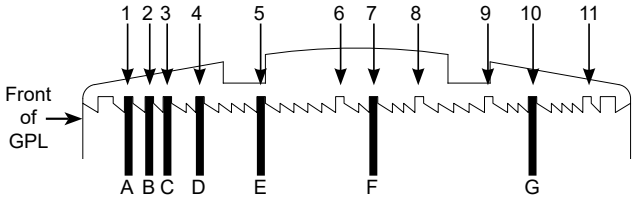

Baffles A thru G
(Baffles shown in factory set positons for 8° View Angle)

View Angle	Baffle Position for GPL
8°	All baffles in factory set position #1, 2, 3, 4, 5, 7, & 10
7°	Move baffle "G" to #11 position
9°	Move baffle "G" to #9 position
11°	Move baffle "G" to #8 position
13°	Omit baffle "G" completely
15°	Omit baffle "G" completely & move baffle "F" to #6 position
23½°	Omit baffle "F" & "G" completely
42°	Omit baffle "E", "F" & "G" completely

Typical Example at 8° View Angle

Signal Height: 20 Ft
Furthest Distance Downlane: 128 Ft
Closest Distance Downlane: 64 Ft

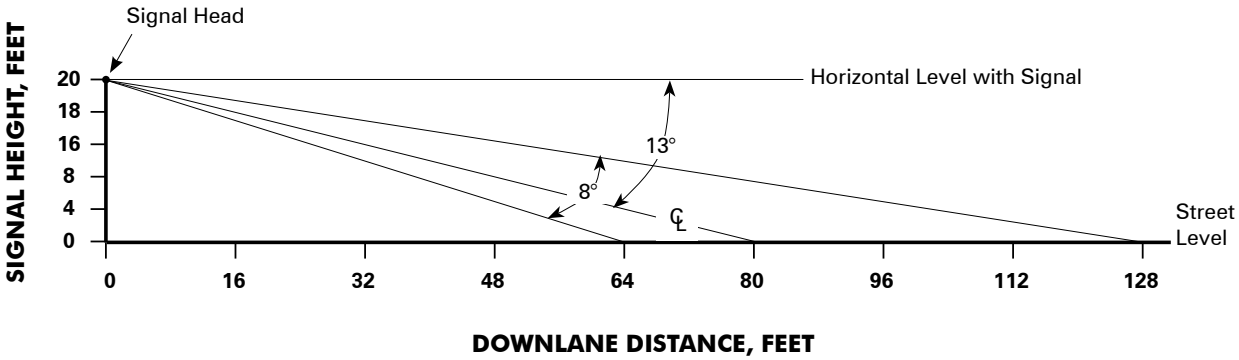

ISO 9001
www.intlcert.com

Aluminum Signal Visors

Full circle and tunnel signal visors are supplied with a universal clip for attachment to signal. Black inside, federal yellow or black outside.

Visor, Full Circle w/ Slots for 12" GPL w/ Universal Clips

SM-1028-UC - [ ] Coating
P_ _=Paint

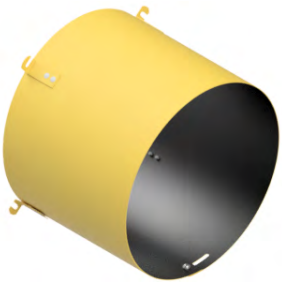

Visor, Full Circle w/o Slots for 12" Signal w/ Universal Clips

SM-1031-UC - [ ] Coating
P_ _=Paint

Visor, Tunnel for 12" Signal w/ Universal Clips

SM-1034-UC - [ ] Coating
P_ _=Paint

Universal Clip Set of 4

SM-1040 - [ ] Coating
P_ _=Paint

Note: 1. All assemblies are supplied standard with stainless steel fasteners.
2. Universal Clips fit Eagle, Econolite, TCT, Mark IV, and McCain signals.
3. See Reference Section page v for available paint colors.

Signal Accessories

The adjustment tool makes it easy to install and adjust a GPL in an existing visor. Pelco also provides a complete installation kit.

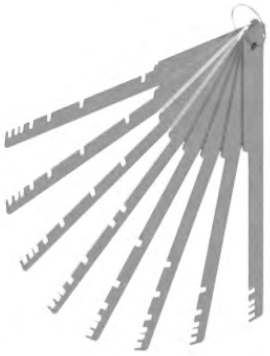

GL-1008-PNC **GPL Combs, Baffle Adjustment Set of 8, Stainless**
Includes 7°, 8°, 9°, 11°, 13°, 15°, 23.5°, 42°

GL-1002-PNC **Adjustment Tool, GPL w/ Depth Gauge**

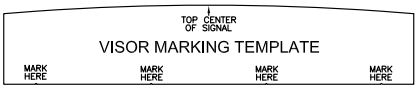

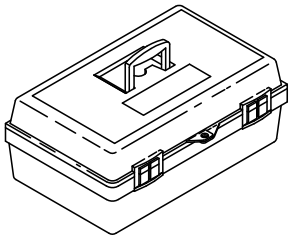

GL-2001-PNC **Installation Kit w/o Screw Gun**
Includes: adjustment tool, visor marking template & sleeve, marking pen, 1/4" & 5/16" shock cord in a small tool box.

GL-2002-PNC **Installation Kit w/ Screw Gun**
Includes: adjustment tool, visor marking template & sleeve, marking pen, 1/4" & 5/16" shock cord, cordless screw gun, battery & charger in a large tool box.

Confirmation Lights

Used to confirm a traffic signal is red when a car enters the intersection. Available in clear, red, or blue and various mounting applications.

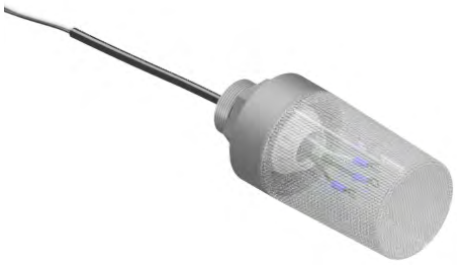

Confirmation Light Assy w/ Globe

SM-0284 - [ ] - [ ]

Globe Color: CL=Clear, RD=Red, BL=Blue

Coating: PNC=Process No Color, P_ _=Paint

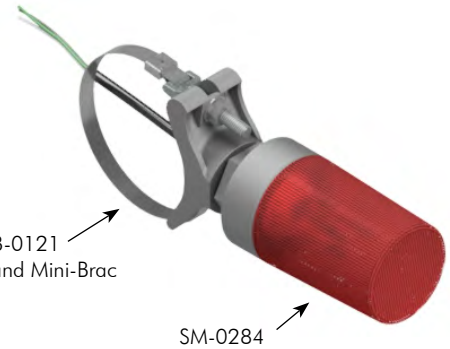

Confirmation Light Assy w/ Globe Band Mount Astro Mini-Brac

SM-0286 - [ ] - [ ] - [ ]

Globe Color: CL=Clear, RD=Red, BL=Blue

Band Length: 29=29″ Band, 42=42″ Band

Coating: PNC=Process No Color, P_ _=Paint

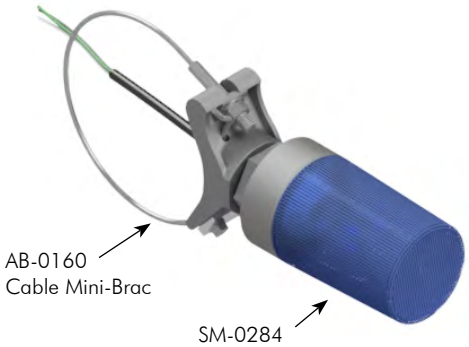

Confirmation Light Assy w/ Globe Cable Mount Astro Mini-Brac

SM-0321 - [ ] - [ ] - [ ]

Globe Color: CL=Clear, RD=Red, BL=Blue

Cable Length: 45=45″ Cable, 62=62″ Cable, 84=84″ Cable

Coating: PNC=Process No Color, P_ _=Paint

Typical Applications:

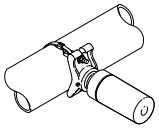

Mast Arm Mount
Astro-Mini-Brac

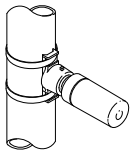

Side-of-Pole Mount
Banded Narrow Hub

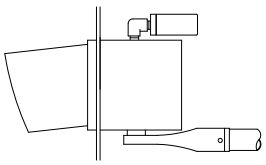

Plumbizer Mount

Note: 1. All assemblies are supplied standard with stainless fasteners and natural aluminum coating. Stainless upgrade to include stainless steel clamp screw or stainless cable.
2. Bulbs not included with assembly. Recommended 67W or 69W 8000 hr traffic signal lamp (not to exceed 75W).
3. See Reference Section page v for available paint colors.

Copper Safe© Cable Retainers

Pelco'santi-theft Cable Retainers are the best solution to help prevent copper cable theft in roadway lighting and traffic poles. Cable Retainers are available in various sizes, are easy to install, and work with Pelco's foundation anchors or existing foundations.

SP-6224-GLV **Cable Retainer Assy, For 4" Foundation Anchor, Galvanized Steel**

Note:
Works with Pelco's PB-5364 4" Foundation Anchor or with existing foundations with a 8" to 13-1/2" bolt circle. Secures 3/16" to 1/2" diameter cables.

SP-6200-GLV **Cable Retainer Assy, For 6" Foundation Anchor, Galvanized Steel**

Note:
Works with Pelco's PB-5372 6" Foundation Anchor or with existing foundations with a 9-1/2" to 13-1/2" bolt circle. Secures 3/16" to 1/2" diameter cables.

SP-6205-GLV **Cable Retainer Assy, For 8" Foundation Anchor, Galvanized Steel**

Note:
Works with Pelco's PB-5375 8" Foundation Anchor or with existing foundations with a 11-1/2" to 17" bolt circle. Secures 3/16" to 1/2" diameter cables.

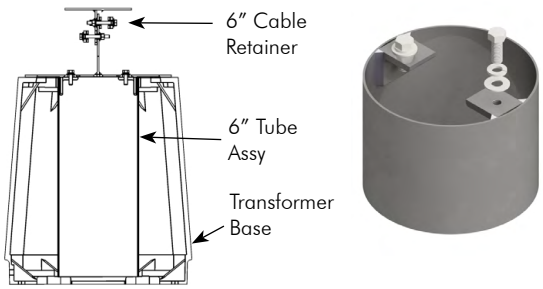

Tube Assy for 6" Cable Retainer, Galvanized Steel

Length
SP-6358 - [ ] - GLV
04.5=4-1/2"
16.38=16-3/8"

Note: 1. All assemblies are supplied standard with stainless fasteners.

ISO 9001 www.intlcert.com

Copper Safe© Base Doors

Pelco's anti-theft Transformer Base Doors are shatter-resistant and pull-off resistant to protect against copper theft. The doors require a special Pelco Installation Kit which includes everything required for installing multiple doors and covers.

Door Assy, Copper Safe© Theft Deterrent, Steel Fits Akron TB1-17, TB1-17 Mod, TB2-17, & TB3-17 Transformer Bases

PB-5520 - [ ] Coating
P__ = Paint

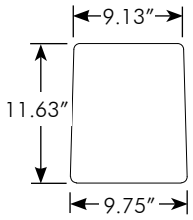

Door Assy, Copper Safe© Theft Deterrent, Steel Fits Akron TB1-20, TB1-20 Mod, TB2-20, & TB3-20 Transformer Bases

PB-5526 - [ ] Coating
P__ = Paint

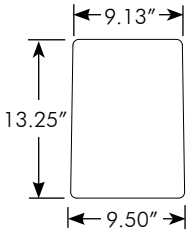

Door Assy, Copper Safe© Theft Deterrent, Steel Fits Akron TB-17H Transformer Base

PB-5536 - [ ] Coating
P__ = Paint

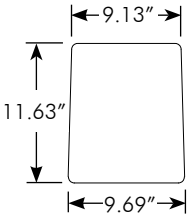

Note: 1. All assemblies are supplied standard with stainless fasteners.
2. Doors require AP-5121 Kit for installation.
3. Typically powder coated P40 Silver, see Reference Section page v for other available paint colors.

Copper Safe© Base Doors

Pelco's anti-theft Transformer Base Doors are shatter-resistant and pull-off resistant to protect against copper theft. The doors require a special Pelco Installation Kit which includes everything required for installing multiple doors and covers.

Door Assy, Copper Safe© Theft Deterrent, Steel Fits Union Metal Med Transformer Base

Coating

PB-5529 - ☐

P__ = Paint

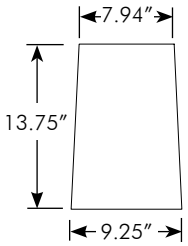

Door Assy, Copper Safe© Theft Deterrent, Steel Fits AB Chance Transformer Base

Coating

PB-5531 - ☐

P__ = Paint

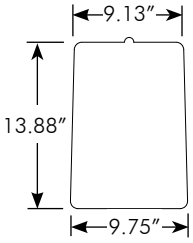

Note: 1. All assemblies are supplied standard with stainless fasteners.
2. Covers require AP-5121 Kit for installation.
3. Typically powder coated P40 Silver, see Reference Section page v for other available paint colors.

ISO 9001 www.intlcert.com

Copper Safe© Hand Hole Covers

Pelco's anti-theft Hand Hole Covers are shatter-resistant and pull-off resistant to protect against copper theft. Copper Safe© covers are available for various sized hand holes. A special Pelco Installation Kit is required which includes everything needed for installing multiple covers and doors.

Hand Hole Cover Assy, Copper Safe© Theft Deterrent, Steel

Fits 4.38″ x 9.63″ to 5.13″ x 10.38″ Oval Opening

AP-3172 - Coating ☐ P__ = Paint

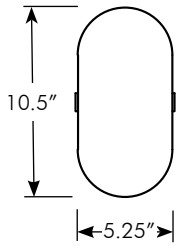

Hand Hole Cover Assy, Copper Safe© Theft Deterrent, Steel

Fits 3.25″ x 9.75″ to 4.25″ x 10.75″ Oval Opening

AP-3173 - Coating ☐ P__ = Paint

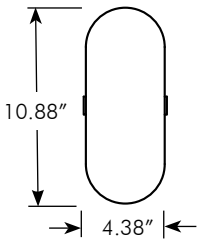

Hand Hole Cover Assy, Copper Safe© Theft Deterrent, Steel

AP-3161 - Coating ☐ P__ = Paint — Fits 2.13″ x 5.13″ to 3.38″ x 6.38″ Oval Opening

AP-3160 - Coating ☐ P__ = Paint — Fits 2″ x 5″ to 2.25″ x 5.25″ Rectangular Opening

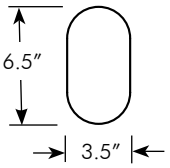

Hand Hole Cover Assy, Copper Safe© Theft Deterrent, Steel

Fits 4.63″ x 7.88″ to 5.75″ x 9.0″ Oval Opening

AP-3167 - Coating ☐ P__ = Paint

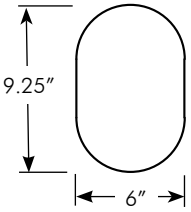

Note: 1. All assemblies are supplied standard with stainless fasteners.
2. Covers require AP-5121 Kit for installation.
3. Typically powder coated P40 Silver, see Reference Section page v for other available paint colors.
4. For hand hole cover matrix see page T13-11.

Copper Safe© Hand Hole Covers

Pelco's anti-theft Hand Hole Covers are shatter-resistant and pull-off resistant to protect against copper theft. Copper Safe© covers are available for various sized hand holes. A special Pelco Installation Kit is required which includes everything needed for installing multiple covers and doors.

Hand Hole Cover Assy, Copper Safe© Theft Deterrent, Steel

Fits 5.63″ x .863″ to 6.38″ x 9.38″ Oval Opening

AP-3180 - [ ] Coating
P__ = Paint

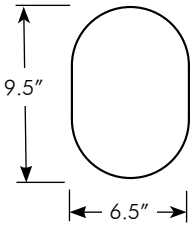

Hand Hole Cover Assy, Copper Safe© Theft Deterrent, Steel

Fits 3.38″ x 9.5″ Oval Opening

AP-3200 - [ ] Coating
P__ = Paint

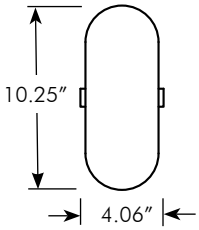

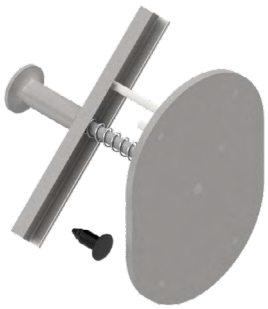

Hand Hole Cover Assy, Copper Safe© Theft Deterrent, Steel

Fits 4.63″ x 6.75″ to 5.25″ x 7.38″ Oval Opening

AP-3181 - [ ] Coating
P__ = Paint

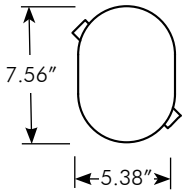

Hand Hole Cover Assy, Copper Safe© Theft Deterrent, Steel

Fits 5″ x 8″ Oval Hand Hole Ring

AP-3158 - [ ] Coating
P__ = Paint

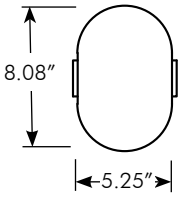

Note: 1. All assemblies are supplied standard with stainless fasteners.
2. Covers require AP-5121 Kit for installation.
3. Typically powder coated P40 Silver, see Reference Section page v for other available paint colors.
4. For hand hole cover matrix see page T13-11.

ISO 9001 www.intlcert.com

Copper Safe© Hand Hole Covers

Pelco's anti-theft Hand Hole Covers are shatter-resistant and pull-off resistant to protect against copper theft. Copper Safe© covers are available for various sized hand holes. A special Pelco Installation Kit is required which includes everything needed for installing multiple covers and doors.

Hand Hole Cover Assy, Copper Safe© Theft Deterrent, Steel

Fits 3.38" x 4.38" to 5" x 16" Oval Opening on 8" OD Pole

AP-3162 - [ ] Coating
P__= Paint

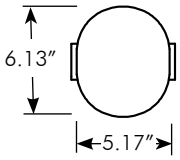

Installation Kit, Copper Safe© Theft Deterrent, for Hand Hole Covers & Doors

AP-5121-PNC

Note:
Required for installing Pelco's theft-deterrent hand hole covers and doors. Includes 3/16" & 3/8" drill bits, security extensions,and security extension wrench, in a PVC storage case. Installation Kit is reusable.

Part No.	Fits Opening Size		Overall Size		Page
	Width	Height	Width	Height	
AP-3172	4.38	9.63	5.25	10.5	T13-9
	5.13	10.38			
AP-3173	3.25	9.75	4.38	10.88	T13-9
	4.25	10.75			
AP-3161	2.13	5.13	3.5	6.5	T13-9
AP-3160 (Rect Opening)	2	5	3.5	6.5	T13-9
	2.25	5.25			
AP-3167	4.63	7.88	6	9.25	T13-9
	5.75	9			
AP-3180	5.63	8.63	6.5	9.5	T13-10
	6.38	9.38			
AP-3200	3.38	9.95	4.06	10.25	T13-10
AP-3181	4.63	6.75	5.38	7.56	T13-10
	5.25	7.38			
AP-3158 (for Hand Hole Ring)	5	8	5.25	8.08	T13-10
AP-3162 (for 8" Dia Pole)	3.38	4.38	5.17	6.13	T13-11
	5	6			

Note: 1. All assemblies are supplied standard with stainless fasteners.
2. Covers require AP-5121 Kit for installation.
3. Typically powder coated P40 Silver, see Reference Section page v for other available paint colors.

This page is intentionally left blank.

PELCO PRODUCTS, INC.

ISO 9001
www.intlcert.com

Aluminum Pipe Fittings

Ell, Serrated, 1-1/2" NPS, Alum

SE-0457 - [Ports] - [Coating]

Ports: SOE=Slip 1 End

Coating: PNC=Process No Color; P_ _=Paint

Ell, Serrated, 1-1/2" NPS w/ Tri-Stud Adapter, Alum

SE-0514 - [Coating]

Coating: PNC=Process No Color; P_ _=Paint

Ell, Serrated, 1-1/2" NPS w/ Tri-Bolt Adapter, Alum

SE-0501 - [Coating]

Coating: PNC=Process No Color; P_ _=Paint

Tee, Serrated, 1-1/2" NPS, Alum

SE-0458 - [Ports] - [Coating]

Ports: SOE=Slip1 End

Coating: PNC=Process No Color; P_ _=Paint

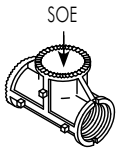

Tee, Serrated, 1-1/2" NPS, Horizontal Slip, Alum

SE-0474 - [Coating]

Coating: PNC=Process No Color; P_ _=Paint

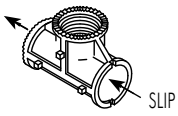

Note: 1. All assemblies are supplied standard with stainless steel fasteners.
2. For double set screw option, specify by including -DS in the part number, i.e., SE-0457-DS-PNC.
3. See Reference Section page v for available paint colors.

Aluminum Pipe Fittings

Tee, Serrated, 1-1/2" NPS w/ Tri-Stud Adapter, Alum

SE-0513 - [ ] (Coating)

PNC=Process No Color
P_ _=Paint

Tee, Serrated, 1-1/2" NPS w/ Tri-Bolt Adapter, Alum

SE-0500 - [ ] (Coating)

PNC=Process No Color
P_ _=Paint

Cross, Serrated, 1-1/2" NPS, Alum

SE-4038 - [ ] (Ports) - [ ] (Coating)

SOE=Slip1 End
SBE=Slip Both Ends

PNC=Process No Color
P_ _=Paint

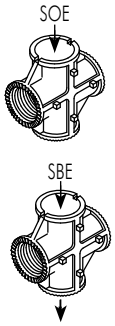

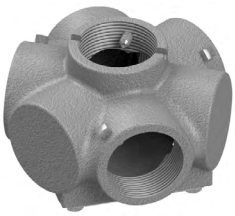

Center Support, 3-Way, 1-1/2" NPS, Alum

SE-0310 - [ ] (Coating)

PNC=Process No Color
P_ _=Paint

Center Support, 4-Way, 1-1/2" NPS, Alum

SE-0305 - [ ] (Ports) - [ ] (Coating)

SOE=Slip1 End

PNC=Process No Color
P_ _=Paint

Note: 1. All assemblies are supplied standard with stainless steel fasteners.
2. For double set screw option specify by including -DS in the part number, i.e., SE-0513-DS-PNC.
3. See Reference Section page v for available paint colors.

ISO 9001 www.intlcert.com

COMPONENTS

PELCO PRODUCTS, INC.

Iron Pipe Fittings

Ell, Serrated, 1-1/2" NPS, Iron

SE-4415 - [Ports] - [Coating]

Ports: SOE=Slip 1 End

Coating: GLV=Galvanized, P__=Paint

Ell, 1-1/2" NPS, Iron

SE-4091 - [Ports] - [Coating]

Ports: SOE=Slip 1 End

Coating: GLV=Galvanized, P__=Paint

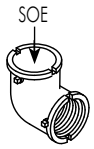

Tee, 1-1/2" NPS, Iron

SE-4092 - [Ports] - [Coating]

Ports: SOE=Slip 1 End, SBE=Slip Both Ends

Coating: GLV=Galvanized, P__=Paint

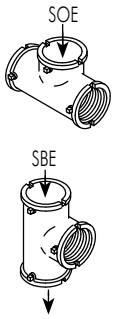

Cross, 1-1/2" NPS, Iron

SE-4093 - [Ports] - [Coating]

Ports: SOE=Slip 1 End, SBE=Slip Both Ends

Coating: GLV=Galvanized, P__=Paint

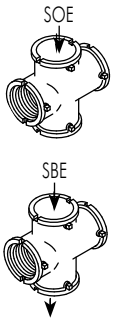

Note: 1. All assemblies are supplied standard with stainless steel fasteners.
2. For double set screw option specify by including -DS in the part number, i.e., SE-4415-DS-PNC.
3. Iron fittings, with the exception of SE-4415 Ell, are not serrated. For serrations add brass or alum serrated lockring.
4. See Reference Section page v for available paint colors.

Iron Pipe Fittings

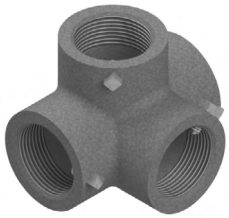

Side Outlet Tee, 1-1/2" NPS, Iron

SE-0437 - [Ports] - [Coating]

Ports: SOE=Slip 1 End, N=Notched

Coating: GLV=Galvanized, P_ _=Paint

Center Support, 2-Way, 1-1/2" NPS, Iron

SE-0495 - [Coating]

Coating: -, P_ _=Paint

Center Support, 3-Way, 1-1/2" NPS, Iron

SE-0482 - [Coating]

Coating: P_ _=Paint

Note: Double set screws are standard.

Center Support, 4-Way, 1-1/2" NPS, Iron

SE-0496 - [Coating]

Coating: P_ _=Paint

Note: 1. All assemblies are supplied standard with stainless steel fasteners.
2. For double set screw option specify by including -DS in the part number, i.e., SE-0496-DS-PNC.
3. Iron fittings, with the exception of SE-4415 Ell, are not serrated. For serrations add alum or brass serrated lockring.
4. See Reference Section page v for available paint colors.

ISO 9001 www.intlcert.com

www.pelcoinc.com - sales@pelcoinc.com - 405-340-3434 - fax: 405-340-3435

Span Wire

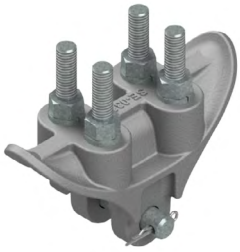

Span Wire Clamp w/ U-Bolts, 3/4" Wide Slot, Alum

SE-0321 - [Bushing] - [Stainless Upgrade] - PNC

Bushing: Blank=None, SS=Stainless Bushing
Stainless Upgrade: Blank=Galv, SS=Stainless

Span Wire Clamp w/ U-Bolts, 5/8" Wide Slot, Alum

SE-4077 - [Bushing] - [Stainless Upgrade] - PNC

Bushing: Blank=None, SS=Stainless Bushing
Stainless Upgrade: Blank=Galv, SS=Stainless

Span Wire Clamp w/ U-Bolts, 1/2" Wide Slot, Alum

SE-3211 - [Bushing] - [Stainless Upgrade] - PNC

Bushing: Blank=None, SS=Stainless Bushing
Stainless Upgrade: Blank=Galv, SS=Stainless

Span Wire Clamp w/ J-Bolts, 3/4" Wide Slot, Alum

SE-4027 - [Bushing] - [Stainless Upgrade] - PNC

Bushing: Blank=None, SS=Stainless Bushing
Stainless Upgrade: Blank=Galv, SS=Stainless

Span Wire Clamp w/ J-Bolts, 1/2" Wide Slot, Alum

SE-4397 - [Bushing] - [Stainless Upgrade] - PNC

Bushing: Blank=None, SS=Stainless Bushing
Stainless Upgrade: Blank=Galv, SS=Stainless

Span Wire Clamp w/ U-Bolts, 1/2" Wide Slot, Iron

SE-0338 - [Stainless Upgrade] - GLV

Stainless Upgrade: Blank=Galv, SS=Stainless

Span Wire Clamp w/ J-Bolts, 1/2" Wide Slot, Iron

SE-0441 - [Stainless Upgrade] - GLV

Stainless Upgrade: Blank=Galv, SS=Stainless

Note: 1. All span wire clamps are supplied standard with galvanized hardware.
2. Stainless upgrade includes stainless steel hardware on span wire clamps.

Span Wire Clamp, Universal w/ J-Bolts 1/2" Wide Slot, Alum

SE-3217 - [ ] - [ ] - PNC

Bushing: Blank=None, SS=Stainless Bushing

Stainless Upgrade: Blank=Galv, SS=Stainless

Span Wire Clamp, 90° w/ J-Bolts 1/2" Wide Slot, Alum

SE-3212 - [ ] - [ ] - PNC

Bushing: Blank=None, SS=Stainless Bushing

Stainless Upgrade: Blank=Galv, SS=Stainless

Span Wire Clamp w/ J-Bolts Serrated, Alum

SE-3213 - [ ] - PNC

Stainless Upgrade: Blank=Galv, SS=Stainless

Span Wire Clamp, Long w/ J-Bolts 5/8" Wide Slots, Iron

SE-4186-GLV

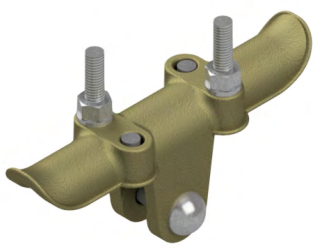

Span Wire Clamp, Long w/ Stainless J-Bolts 3/4" Wide Slots, Bronze

SE-3323 - PNC

Note:
Supplied standard with stainless hardware.

Note: 1. All span wire clamp, with the exception of the bronze clamp, are supplied standard with galvanized hardware.
2. Stainless upgrade includes stainless steel hardware on span wire clamps.

Span Wire

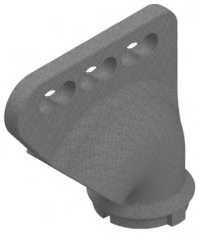

Wire Outlet Body, Iron w/ Grommet
1-1/2" NPS, 1/2" Wide Comb

SE-4118 - [ ] (Coating)

P_ _=Paint

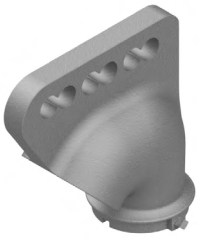

Wire Outlet Body, Alum w/ Grommet
1-1/2" NPS, 3/4" Wide Comb

SE-4117 - [ ] (Bushing) - PNC

Blank=None
SS=Stainless Bushing

Wire Outlet Body w/ Grommet
1-1/2" NPS, 3/4" Wide Comb, Bronze

SE-4421 - [ ] (Coating)

PNC=Process No Color
P_ _=Paint

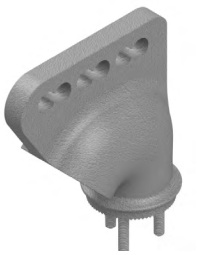

Wire Outlet Body w/ Grommet
Tri-Stud, 3/4" Wide Comb, Alum

SE-0545 - [ ] (Bushing) - [ ] (Coating)

Blank=None
SS=Stainless Bushing

PNC=Process No Color
P_ _=Paint

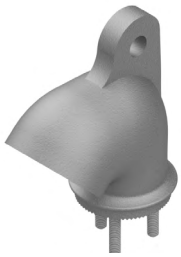

Wire Outlet Body w/ Grommet
Tri-Stud, Single Clevis, Alum

SE-0524 - [ ] (Bushing) - [ ] (Coating)

Blank=None
SS=Stainless Bushing

PNC=Process No Color
P_ _=Paint

Wire Outlet Body w/ Grommet
Tri-Stud Adjustable, Alum

SE-0523 - [ ] (Coating)

PNC=Process No Color
P_ _=Paint

Note: 1. All assemblies are supplied standard with stainless steel fasteners.
2. For double set screws option specify by including -DS in the part number, i.e., SE-4118-DS-PNC.
3. See Reference Section page v for available paint colors.

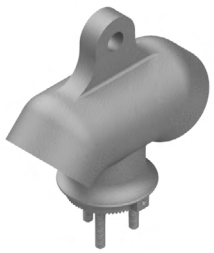

Wire Outlet Body, Double
Single Clevis Tri-Stud, 3/4" Wide, Alum

SE-0531 - [Bushing] - [Coating]

Bushing: Blank=None, SS=Stainless Bushing

Coating: PNC=Process No Color, P_ _=Paint

Wire Outlet Body, Double
Single Clevis 1-1/2" NPS, 3/4" Wide, Alum

SE-4058 - [Bushing] - [Coating]

Bushing: Blank=None, SS=Stainless Bushing

Coating: PNC=Process No Color, P_ _=Paint

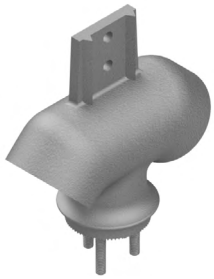

Wire Outlet Body, Double
Adjustable Tri-Stud, Alum

SE-0532 - [Coating]

Coating: PNC=Process No Color, P_ _=Paint

Wire Outlet Body, Double
Multi Clevis Tri-Stud, 3/4" Wide Comb, Alum

SE-0558 - [Bushing] - [Coating]

Bushing: Blank=None, SS=Stainless Bushing

Coating: PNC=Process No Color, P_ _=Paint

Wire Outlet Body, Double
Universal 1-1/2" NPS, 1/2" Wide Comb, Iron

SE-4155 - [Bushing] - [Coating]

Bushing: Blank=None, SS=Stainless Bushing

Coating: P_ _=Paint

Note: 1. All assemblies are supplied standard with stainless steel fasteners.
2. For double set screws option specify by including -DS in the part number, i.e., SE-4058-DS-PNC.
3. See Reference Section page v for available paint colors.

ISO 9001 www.intlcert.com

Span Wire

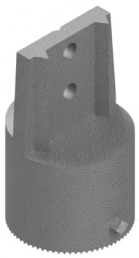

Hanger Body, 1-1/2" NPS, Alum

SE-0530 - [ ] Coating

PNC=Process No Color
P_ _=Paint

Hanger Body, Single-Stud, Alum

SE-0438 - [ ] Coating

PNC=Process No Color
P_ _=Paint

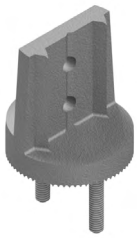

Hanger Body, Double Stud, Alum

SE-0516 - [ ] Coating

PNC=Process No Color
P_ _=Paint

Hanger Body, Tri-Stud, Alum

SE-0512 - [ ] Coating

PNC=Process No Color
P_ _=Paint

Note: 1. All assemblies are supplied standard with stainless steel fasteners.
2. For double set screws option specify by including -DS in the part number, i.e., SE-0530-DS-PNC.
3. See Reference Section page v for available paint colors.

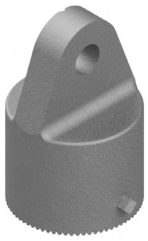

Clevis Adapter, 1-1/2" NPS
3/4" Clevis, Alum

SE-4030 - [Bushing] - [Coating]

Bushing: Blank=None, SS=Stainless Bushing

Coating: PNC=Process No Color, P_ _=Paint

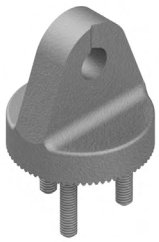

Clevis Adapter, 5/16"-18 Tri-Stud
3/4" Clevis , Alum

SE-4031 - [Bushing] - [Coating]

Bushing: Blank=None, SS=Stainless Bushing

Coating: PNC=Process No Color, P_ _=Paint

Clevis Adapter, 1/2"-13 Single Stud
3/4" Clevis, Alum

SE-0540 - [Bushing] - [Coating]

Bushing: Blank=None, SS=Stainless Bushing

Coating: PNC=Process No Color, P_ _=Paint

Clevis Adapter, 1/2"-13 Single Stud
3/4" Wide Slot, Alum

SE-0630 - [Bushing] - [Coating]

Bushing: Blank=None, SS=Stainless Bushing

Coating: PNC=Process No Color, P_ _=Paint

Note: 1. All assemblies are supplied standard with stainless steel fasteners.
2. For double set screws option specify by including -DS in the part number, i.e., SE-4030-DS-PNC.
3. See Reference Section page v for available paint colors.

ISO 9001 www.intlcert.com

Span Wire

Span Wire Adapter, 1-1/2" NPS 5/8" Clevis w/ Stainless Bushing, Alum

SE-0371 - [ ]

Coating
PNC=Process No Color
P_ _=Paint

Tri-Stud Adapter, 1-1/2" NPS External Threads Alum

SE-0503 - PNC

Tri-Bolt Adapter, 1-1/2" NPS External Threads Alum

SE-0502 - PNC

Tri-Stud Adapter, 1-1/2" NPS Internal Threads Alum

SE-0533 - [ ]

Coating
PNC=Process No Color
P_ _=Paint

Tri-Bolt Adapter, 1-1/2" NPS Internal Threads, Alum

SE-4242 - [ ]

Coating
PNC=Process No Color
P_ _=Paint

Note: 1. All assemblies are supplied standard with stainless steel fasteners.
2. For double set screws option specify by including -DS in the part number, i.e., SE-0533-DS-PNC.
3. See Reference Section page v for available paint colors.

Disconnect Balancer, 1-1/2" NPS 1/2" Wide Comb, Iron, Zinc 2

SE-0380-ZN2

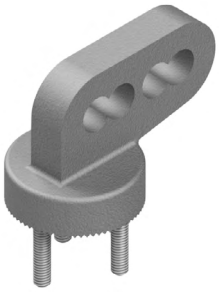

Disconnect Balancer, Tri-Stud 3/4" Wide Comb, Alum

SE-0505 - [ ] - [ ]

Bushing
Blank=None
SS=Stainless Bushing

Coating
PNC=Process No Color
P_ _=Paint

Note: 1. All assemblies are supplied standard with stainless steel fasteners.
2. See Reference Section page v for available paint colors.

COMPONENTS
PELCO PRODUCTS, INC.
ISO 9001
www.intlcert.com

Span Wire

PAL Balance Adjuster, Pivot and Lock Stainless Eyebolt, Steel

SE-3219 - [Slot] - [Eyebolt] - [Stainless Upgrade] - [Coating]

Slot	Eyebolt	Stainless Upgrade	Coating
0.50=1/2″ 0.75=3/4″	0.50=1/2″ 0.75=3/4″	Blank=Galv SS=Stainless	GLV=Galvanized P_ _=Paint

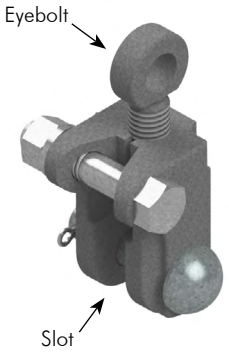

Balance Adjuster, Iron

SE-3108 - [Slot] - [Eyebolt] - [Stainless Upgrade] - [Coating]

Slot	Eyebolt	Stainless Upgrade	Coating
0.50=1/2″ 0.75=3/4″	0.50=1/2″ 0.75=3/4″	Blank=Galv SS=Stainless	GLV=Galvanized P_ _=Paint

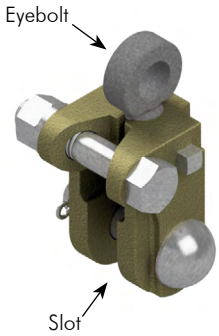

Balance Adjuster, Bronze

SE-3200 - [Slot] - [Eyebolt] - [Coating]

Slot	Eyebolt	Coating
0.50=1/2″ 0.75=3/4″	0.50=1/2″ 0.75=3/4″	PNC=Process No Color P_ _=Paint

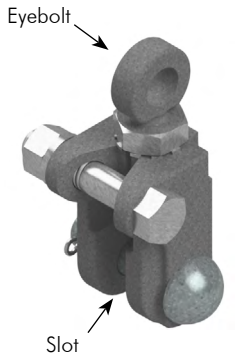

Balance Adjuster w/ Jam Nut & Lock Washer, Iron

SE-3191 - [Slot] - [Eyebolt] - [Stainless Upgrade] - [Coating]

Slot	Eyebolt	Stainless Upgrade	Coating
0.50=1/2″ 0.75=3/4″	0.50=1/2″ 0.75=3/4″	Blank=Galv SS=Stainless	GLV=Galvanized P_ _=Paint

Note: 1. All assemblies are supplied standard with stainless steel fasteners and galvanized clevis pins. Stainless upgrade shall include stainless steel clevis pins.
2. See Reference Section page v for available paint colors.

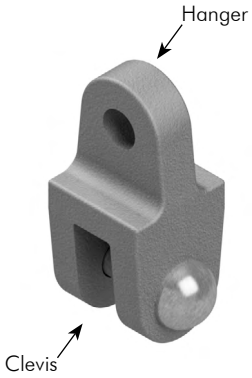

Clevis Hanger w/ Pins
3/4" Hanger x 3/4" Clevis, Alum

	Bushing		Stainless Upgrade		Coating
SE-0467 -	[ ]	-	[ ]	-	[ ]
	Blank=None SS=Stainless Bushing		Blank=Galv SS=Stainless		PNC=Process No Color P_ _=Paint

Clevis Hanger w/ Pins
3/4" Hanger x 1/2" Clevis, Alum

	Bushing		Stainless Upgrade		Coating
SE-0610 -	[ ]	-	[ ]	-	[ ]
	Blank=None SS=Stainless Bushing		Blank=Galv SS=Stainless		PNC=Process No Color P_ _=Paint

Clevis-Clevis Hanger w/ Pins
3/4" x 1/2", Alum

	Bushing		Stainless Upgrade		Coating
SE-0611 -	[ ]	-	[ ]	-	[ ]
	Blank=None SS=Stainless Bushing		Blank=Galv SS=Stainless		PNC=Process No Color P_ _=Paint

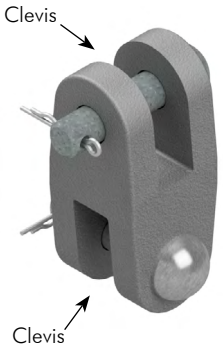

Clevis-Clevis Hanger w/ Pins
3/4" x 3/4", Alum

	Bushing		Stainless Upgrade		Coating
SE-0468 -	[ ]	-	[ ]	-	[ ]
	Blank=None SS=Stainless Bushing		Blank=Galv SS=Stainless		PNC=Process No Color P_ _=Paint

Clevis-Clevis Hanger w/ Pin
1/2" x 1/2", Alum

	Bushing		Stainless Upgrade		Coating
SE-0464 -	[ ]	-	[ ]	-	[ ]
	Blank=None SS=Stainless Bushing		Blank=Galv SS=Stainless		PNC=Process No Color P_ _=Paint

Note: 1. All assemblies are supplied standard with stainless steel fasteners and galvanized clevis pins. Stainless upgrade shall include stainless steel clevis pins.
2. See Reference Section page v for available paint colors.

ISO 9001 www.intlcert.com

Span Wire

Extender Connector Hanger, 10-Hole Alum

SE-0539 - [Bushing] - [Coating]

Bushing: Blank=None, SS=Stainless Bushing

Coating: PNC=Process No Color, P_ _=Paint

Extender Connector Hanger, 10-Hole, Serrated, Alum

SE-0543 - [Bushing] - [Coating]

Bushing: Blank=None, SS=Stainless Bushing

Coating: PNC=Process No Color, P_ _=Paint

Extender Connector Hanger, 2-Hole 1/2" Width, Alum

SE-0508 - [Bushing] - [Coating]

Bushing: Blank=None, SS=Stainless Bushing

Coating: PNC=Process No Color, P_ _=Paint

Extender Connector Hanger, 2-Hole Heavy Duty 3/4" Width, Alum

SE-0656 - [Bushing] - [Coating]

Bushing: Blank=None, SS=Stainless Bushing

Coating: PNC=Process No Color, P_ _=Paint

Note: See Reference Section page v for available paint colors.

Extender, 3/8" Dia Holes 1" CTC, Alum

SE-0507 - [Length] - [Coating]

Length: 11=11" 19=19" 40=40" 72=72"

Coating: PNC=Process No Color P_ _=Paint

Tri-Stud Hanger Body, Adjustable 10-Hole, Alum

SE-0538 - [Coating]

Coating: PNC=Process No Color P_ _=Paint

Lower Arm, 2-Way 16-1/2" CTC Single Stud Serrated, Alum

SE-4010 - [Coating]

Coating: PNC=Process No Color P_ _=Paint

Lower Arm, 2-Way 17" CTC Single Stud Serrated, Alum

SE-0521 - [Coating]

Coating: PNC=Process No Color P_ _=Paint

Note: 1. See Reference Section page v for available paint colors.

ISO 9001 www.intlcert.com

COMPONENTS PELCO PRODUCTS, INC.

Hubs & Mounting Brackets

Hub Plate w/ Cable Guide, 1-1/2" NPS, Alum

SE-0444 - Coating [ ]

PNC=Process No Color
P_ _=Paint

Hub Plate w/o Cable Guide, 1-1/2" NPS, Alum

SE-0445 - Coating [ ]

PNC=Process No Color
P_ _=Paint

Hub Plate w/o Cable Guide, 1-1/2" NPS, Iron

SE-4124 - Coating [ ]

P_ _=Paint

Hub Plate w/o Cable Guide, 1-1/2" NPS, Bronze

SE-4426 - Coating [ ]

PNC=Process No Color
P_ _=Paint

Hub Plate, Universal, 1-1/2" NPS w/ 15/16" Dia Hole in Rear, Alum

SE-4071 - Coating [ ]

PNC=Process No Color
P_ _=Paint

Hub Plate, Universal, 1-1/2" NPS w/ 1-1/2" Dia Hole in Rear, Alum

SE-4108 - Coating [ ]

PNC=Process No Color
P_ _=Paint

Note: 1. All assemblies are supplied standard with stainless steel fasteners.
2. For double set screw option specify by including -DS in the part number, i.e., SE-0444-DS-PNC.
3. See Reference Section page v for available paint colors.

Hub Plate, Flat Back, 1-1/2" NPS, Alum

SE-0415 - [ ] Coating

PNC=Process No Color
P_ _=Paint

Hub Plate, 4" Pipe, 1-1/2" NPS, Alum

SE-0454 - [ ] Coating

PNC=Process No Color
P_ _=Paint

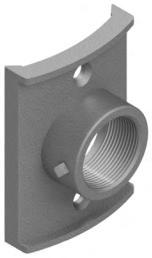

Hub Plate, Large Pole, 1-1/2" NPS, Alum

SE-0357 - [ ] Coating

PNC=Process No Color
P_ _=Paint

Note: 1. All assemblies are supplied standard with stainless steel fasteners.
2. For double set screw option specify by including -DS in the part number, i.e., SE-0415-DS-PNC.
3. See Reference Section page v for available paint colors.

ISO 9001 www.intlcert.com

Hubs & Mounting Brackets

Hub Plate, Extended
1-1/2" NPS, Alum

SE-0381 - [Mounting] - [Coating]

Mounting: 0.75=3/4" Mounting Hole

Coating: PNC=Process No Color, P_ _=Paint

Hub Plate, Extended
1-1/2" NPS w/ Downhole, Alum

SE-0382 - [Mounting] - [Coating]

Mounting: 0.75=3/4" Mounting Hole

Coating: PNC=Process No Color, P_ _=Paint

Hub Plate, Extended Flat Back
1-1/2" NPS, Alum

SE-0465 - [Mounting] - [Coating]

Mounting: 0.75=3/4" Mounting Hole

Coating: PNC=Process No Color, P_ _=Paint

Hub Plate, Extended Flat Back
1-1/2" NPS w/ Downhole, Alum

SE-0466 - [Mounting] - [Coating]

Mounting: 0.75=3/4" Mounting Hole

Coating: PNC=Process No Color, P_ _=Paint

Note: 1. All assemblies are supplied standard with stainless steel fasteners.
2. For double set screw option specify by including -DS in the part number, i.e., SE-0381-DS-PNC.
3. See Reference Section page v for available paint colors.

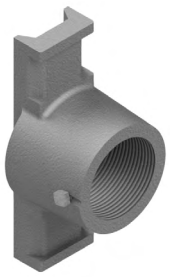

Hub Plate, Narrow, 1-1/2" NPS, Alum

SE-4050 - [ ]

Coating

PNC=Process No Color
P_ _=Paint

Hub Plate, Single, 1-1/2" NPS, Alum

SE-0111 - [ ] - [ ]

Mounting Hole

Blank= 3/8" Dia
0.563=9/16" Dia

Coating

PNC=Process No Color
P_ _=Paint

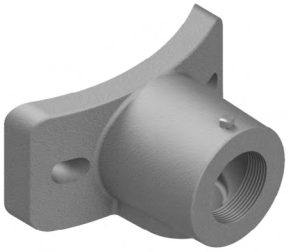

Hub Plate, Wood Pole 1-1/2" NPS, Alum

SE-4079 - [ ]

Coating

PNC=Process No Color
P_ _=Paint

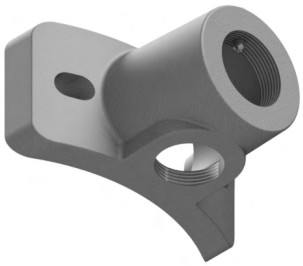

Hub Plate, Wood Pole 1-1/2" NPS w/ Downhole, Alum

SE-4080 - [ ]

Coating

PNC=Process No Color
P_ _=Paint

Note: 1. All assemblies are supplied standard with stainless steel fasteners.
2. For double set screw option specify by including -DS in the part number, i.e., SE-4050-DS-PNC.
3. See Reference Section page v for available paint colors.

COMPONENTS
PELCO PRODUCTS, INC.
ISO 9001
www.intlcert.com

Hubs & Mounting Brackets

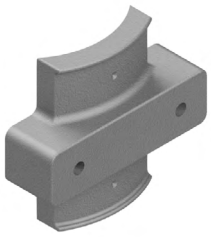

Cabinet Mounting Bracket, Alum

SE-0425 - [ ]

Coating
PNC=Process No Color
P_ _=Paint

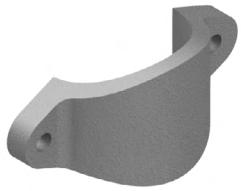

Adapter, 2-7/8" to 3-1/2" OD Pole, Alum

SE-4078 - [ ]

Coating
PNC=Process No Color
P_ _=Paint

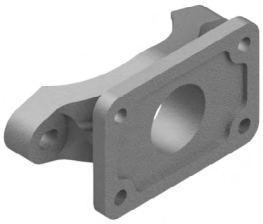

Mounting Bracket, 4-1/2" OD Pole, Alum

SE-0104 - [ ]

Coating
PNC=Process No Color
P_ _=Paint

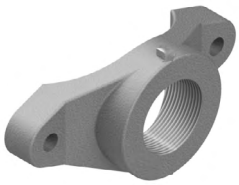

Mounting Hub, 1-1/2" NPS, 4-1/2" OD Pole, Alum

SE-0384 - [ ]

Coating
PNC=Process No Color
P_ _=Paint

Note: 1. All assemblies are supplied standard with stainless steel fasteners.
2. For double set screw option specify by including -DS in the part number, i.e., SE-0384-DS-PNC.
3. See Reference Section page v for available paint colors.

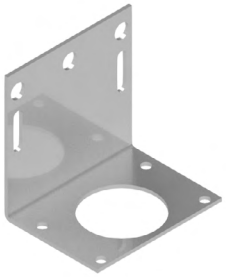

Cabinet Mounting Bracket, 1/8" Thick 4-1/2" x 3-3/8" x 4-1/2", Alum

SE-0141 - [ ] Coating

PNC=Process No Color
P_ _=Paint

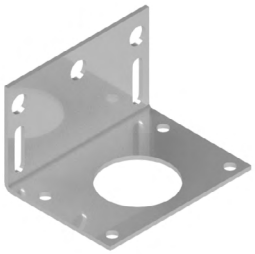

Cabinet Mounting Bracket, 1/8" Thick 4-1/2" x 3-3/8" x 2-7/8", Alum

SE-0113 - [ ] Coating

PNC=Process No Color
P_ _=Paint

Cabinet Mounting Bracket, 1/4" Think 6-3/4" x 3-1/2" x 2-1/16", Alum

SE-0118 - [ ] Coating

PNC=Process No Color
P_ _=Paint

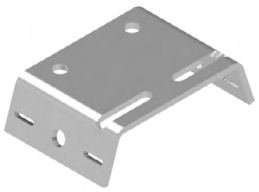

Cabinet Mounting Bracket, 1/4" Thick 6-3/4" x 4-1/2" x 2-1/16", Alum

SE-0120 - [ ] Coating

PNC=Process No Color
P_ _=Paint

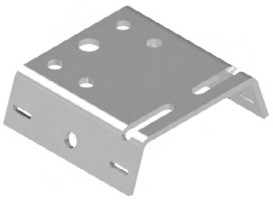

Cabinet Mounting Bracket, 1/4" Thick 6-3/4" x 6" x 2-1/16", Alum

SE-0126 - [ ] Coating

PNC=Process No Color
P_ _=Paint

Note: See Reference Section page v for available paint colors.

COMPONENTS
PELCO PRODUCTS, INC.
ISO 9001
www.intlcert.com

Hubs & Mounting Brackets

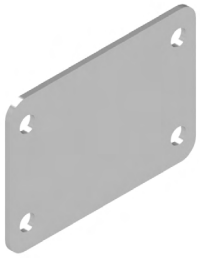

Closure Plate, Alum
Flasher Cabinet

SE-0117 - [ ] Coating

PNC=Process No Color
P_ _=Paint

SE-0119-PNC **Hub Gasket, 1/8" Closed Cell Sponge Adhesive Backed Flasher Cabinet**

SE-0148-PNC **Hub Gasket, 1/8" Neoprene Flasher Cabinet**

This page is intentionally left blank.

PELCO PRODUCTS, INC.

ISO 9001
www.intlcert.com

Tubes & Pipes

SE-0326 - [Length in Inches] - [Coating] **Support Tube, 1-1/2" NPS, Alum**

PNC=Process No Color
P_ _=Paint

SE-4370 - [Length in Inches] - [Coating] **Support Tube, 2" NPS, Alum**

PNC=Process No Color
P_ _=Paint

SE-0491 - [Length in Inches] - [Coating] **Support Tube, 1-1/2" NPS, Steel**

PNC=Process No Color
P_ _=Paint

SE-0484 - [Length in Inches] - [Coating] **Pipe, 1-1/2", Sch 40, Alum**

PNC=Process No Color
P_ _=Paint

SE-0475 - [Length in Inches] - [Coating] **Pipe, 1-1/2", Sch 80, Alum**

PNC=Process No Color
P_ _=Paint

SE-0494 - [Length in Inches] - [Coating] **Pipe, 2", Sch 40, Alum**

PNC=Process No Color
P_ _=Paint

SE-4362 - [Length in Inches] - [Coating] **Pipe, 2", Sch 80, Alum**

PNC=Process No Color
P_ _=Paint

Note: 1. Standard tubes and pipes are sold in 1 inch increments. For other lengths contacts sales.
2. See Reference Section page v for available paint colors.

Nipples

SE-0436 - [Length in Inches] - [Coating] **Nipple, 1-1/2" NPS, Sch 40 Alum**

PNC=Process No Color
P_ _=Paint

SE-4372 - [Length in Inches] - [Coating] **Nipple, 1-1/2" NPS, Sch 80 Alum**

PNC=Process No Color
P_ _=Paint

SE-4204 - [Length in Inches] - [Coating] **Nipple, 1-1/2" NPS x NPT, Alum**

PNC=Process No Color
P_ _=Paint

SE-0469 - [Length in Inches] - [Coating] **Nipple, 1-1/2" NPS, Steel**

P_ _=Paint

SE-4200 - [Length in Inches] - [Coating] **Nipple, 1-1/2" NPT, Steel**

P_ _=Paint

SE-0309 - [Length] - PNC **All Thread Nipple, 1-1/2" NPS, Alum**

02.13=2-1/8"
02.5=2-1/2"
03=3"
04=4"
04.5=4-1/2"
05=5"
06=6"

SE-0492 - [Length] - ZN1 **All Thread Nipple, 1-1/2" NPS, Steel**

02.13=2-1/8"
02.5=2-1/2"
03=3"
04=4"
04.5=4-1/2"
05=5"
06=6"

SE-4063 - [Length] - ZN1 **Close Nipple, 1-1/2" NPS x NPT, Steel**

02.5=2-1/2"
03=3"
03.5=3-1/2"

Note: 1. Standard tubes and pipes are sold in 1 inch increments. For other lengths contacts sales.
2. See Reference Section page v for available paint colors.

Caps & Closures

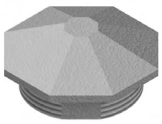

Octagonal Closure Cap, Alum
1-1/2" NPS x 1/2"

SE-4088 - [ ] Coating

PNC=Process No Color
P_ _=Paint

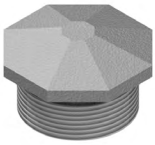

Octagonal Closure Cap, Alum
1-1/2" NPS x 7/8"

SE-0361 - [ ] Coating

PNC=Process No Color
P_ _=Paint

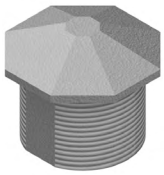

Octagonal Closure Cap, Alum
1-1/2" NPS x 1-3/8"

SE-0483 - [ ] Coating

PNC=Process No Color
P_ _=Paint

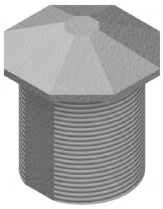

Octagonal Closure Cap, Alum
1-1/2" NPS x 2"

SE-0442 - [ ] Coating

PNC=Process No Color
P_ _=Paint

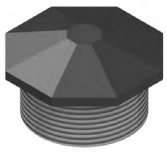

Octagonal Closure Cap, Plastic
1-1/2" NPS x 7/8"

SE-0499 - [ ] Color

P01=Yellow
P02=Black
P05=New York State Green (forest)
P06=Automatic Green (dark olive)
P17=Platinum

Note: See Reference Section page v for available paint colors.

Caps & Closures

Fitting Cap, 1-1/2", Plastic

SE-0304 - [ ] Color

P01=Yellow
P02=Black

Fitting Cap, 1-1/4", Plastic

SE-0419 - [ ] Color

P01=Yellow
P02=Black

AS-0398-P02 **Tube Cap, Black Plastic**

AB-0271-PNC **Cap, CGB Closure, 3/4", Plastic**

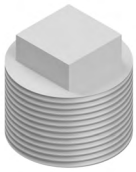

SE-0479-PNC **Plug, 1-1/4" Sq Hd, Threaded, Plastic,**

Signal Closure Kit, Plastic

SE-3054 - [ ] Color

P01=Yellow
P02=Black
P05=New York State Green (forest)
P06=Automatic Green (dark olive)

Note: 1. All assemblies are supplied standard with stainless steel fasteners.

Hardware

SM-0173-ZN2 **Roger Wrench w/ 10" Handle, Steel, Zinc 2**

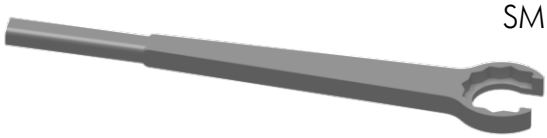

SM-0337-PNC **Hex Nipple Wrench, 12 Pt, 18" Handle, Alum**

SE-0443-PNC **Hex Nipple, 1-1/2" NPS x 1-1/2" Lg, Alum**

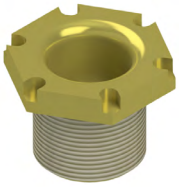

SE-0435-ZN2 **Hex Nipple, 1-1/2" NPS x 1-1/2" Lg, Steel, Zinc 2**

SE-0644-ZN2 **Hex Nipple, 1-1/2" NPS x 1-3/4" Lg, Steel, Zinc 2**

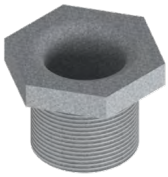

SE-0690-GLV **Hex Nipple, 1-1/2" NPS x 1-1/2" Lg, Steel, Galv**

Check Nut, 1-1/2" NPS, Alum

SE-0448 - [ ] - PNC

Set Screws
1S=Single Set Screw
DS=Double Set Screw

Check Nut, 1-1/2" NPS, Steel, White Zinc

SE-0670 - [ ] - ZN1

Set Screws
1S=Single Set Screw
DS=Double Set Screw

Note: 1. All assemblies are supplied standard with stainless steel fasteners.

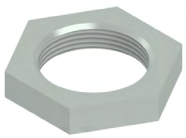

SE-4017-ZN1 **Hex Nut, 1-1/2" NPS, Iron**

SE-0360-PNC **Lockring, Serrated, Alum**

SE-4029-BRS **Lockring, Serrated, Brass**

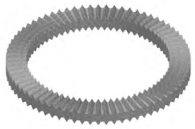

SE-0451-PNC **Lockring, Double Serrated, Alum**

SE-4125-PNC **Conduit Locknut, 1-1/2" NPS, w/ Serrations, Zinc 1**

SE-4048-ZN1 **Conduit Locknut, 3/4" NPT, Zinc 1**

ISO 9001 www.intlcert.com

Hardware

SE-0375-SS **Slotted Washer, Stainless**

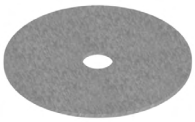

SE-4113-SS **Washer, Stainless**
0.39" ID x 2.44" OD x .06" THK

SE-4061-SS **Washer, Stainless**
1.97" ID x 2.61" OD x .06" THK

SE-4061-ZN1 **Washer, Steel, Zinc 1**
1.92" ID x 2.61" OD x .06" THK

SE-0367-PNC **Washer, Nylon**
1.93" ID x 2.69" OD x .12" THK

SE-0354-PNC **Gasket, Neoprene**

AB-0278-PNC **Gasket, Slotted Tri-Bolt, Neoprene**

Hardware

SE-0449-PNC **Grommet, 1-1/2" w/ Diaphragm Neoprene**

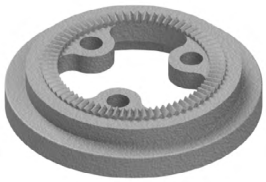

AB-0218-PNC **Adapter Ring, 3M, Alum**

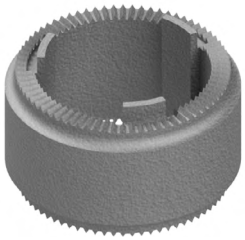

SE-0477-PNC **ICC Ped Head Spacer, Alum**

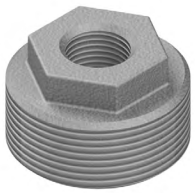

SE-0577-GLV **Reducer Bushing, 1-1/2" NPT x 1/2" NPT, Galvanized Iron**

SE-0471-GLV **Reducer Bushing, 1-1/2" NPT x 3/4" NPT, Galvanized Iron**

SE-0565-GLV **Reducer Bushing, 1-1/2" NPT x 1" NPT, Galvanized Iron**

SE-4011-PNC **Insulator Bushing, 1-1/2" NPS, Black Plastic**

SE-4028-ZN1 **CGB, 3/4", .55" to .65" Wire, Zinc 1**

SE-0490-ZN1 **CGB, 3/4", .55" to .75" Wire, Zinc 1**

SE-4216-ZN1 **CGB, 1", .55" to .65" Wire, Zinc 1**

Hardware

Notched Coupling, 1-1/2" NPS x 2", Alum

SE-0346 - [ ] Coating

PNC=Process No Color
P_ _=Paint

Notched Coupling, 1-1/2" NPS x 2", Steel

SE-4170 - [ ] Coating

GLV=Galvanized
P_ _=Paint

Notched Coupling, Steel 1-1/2" NPS x 2" w/ Lock Ring

SE-3254 - [ ] Lock Ring - [ ] Coating

Blank=Alum
BRS=Brass

GLV=Galvanized
P_ _=Paint

Note: 1. All assemblies are supplied standard with stainless steel fasteners.
2. For double set screw option specify by including -DS in the part number, i.e., SE-0346-DS-PNC.
3. See Reference Section page v for available paint colors.

Slip Connector, 1-1/2" NPS, Alum

SE-0535 - [ ] Coating

PNC=Process No Color
P_ _=Paint

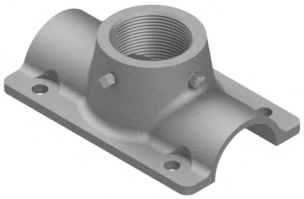

Tube Saddle, 1-1/2" NPS, Alum

AB-0262 - [ ] Coating

PNC=Process No Color
P_ _=Paint

Tube Saddle Kit, 1-1/2" NPS w/ 5/16" V-Bolts & Hardware, Alum

AB-3048 - [ ] Coating

PNC=Process No Color
P_ _=Paint

Note: 1. All assemblies are supplied standard with stainless steel fasteners.
2. See Reference Section page v for available paint colors.

ISO 9001 www.intlcert.com

Banding Products

BANDING

Catalog Number	Width Inches	Width mm	Thickness Inches	Thickness mm	Weight Lbs	Weight Kg	Min Breaking Strength in lbs
TYPE 201 STAINLESS STEEL - *100 Ft. Per Roll*							
US-8122-04	1/2	12.70	0.030	0.76	5.1	2.4	1500
US-8122-05	5/8	15.88	0.030	0.76	6.4	3.0	1875
US-8122-06	3/4	19.05	0.030	0.76	7.7	3.6	2250
TYPE 316 STAINLESS STEEL BAND - *100 Ft. Per Roll*							
US-8124-04	1/2	12.70	0.030	0.76	5.1	2.4	1200
US-8124-05	5/8	15.88	0.030	0.76	6.4	3.0	1500
US-8124-06	3/4	19.05	0.030	0.76	7.7	3.6	1800

HEAVY DUTY (HD) BANDING

Heavy Duty Band is available in type 201. HD Band is designed for heavy duty applications and 1-1/4", 201 stainless steel band has a breaking strength of approximately 5500 lbs. We recommend double wrapping for maximum strength.

Catalog Number	Width Inches	Width mm	Thickness Inches	Thickness mm	Weight Lbs	Weight Kg
TYPE 201 HEAVY DUTY STAINLESS STEEL BAND - *100 Ft. Per Roll*						
US-8124-30	3/4	19.05	0.044	1.12	11.6	5.4
US-8124-31	1	25.40	0.044	1.12	13.7	6.4
US-8124-32	1-1/4	31.75	0.044	1.12	17.2	8.0

BAND-STRAP .024" (.061mm) THICK - *200 - 300 Stainless Steel*

Catalog Number	Width Inches	Width mm	Weight Lbs	Weight Kg	Package Quantity
US-8121-34	1/2	12.70	4.08	1.85	100 Ft. Roll
US-8121-35	5/8	15.88	5.09	2.31	100 Ft. Roll
US-8121-36	3/4	19.05	6.11	2.77	100 Ft. Roll
US-8121-28	1/2	12.70	8.15	3.70	200 Ft. Roll
US-8121-29	5/8	15.88	10.19	4.62	200 Ft. Roll
US-8121-30	3/4	19.05	12.23	5.54	200 Ft. Roll

BAND TOOL

The USA BAND TOOL is a forged double-plated tool capable of tensioning over 2400 lbs. The banding tool has a built-in cutter and a spring loaded gripper lever. The spin handle has a large retaining ring to keep the handle in place and can be used to hang on a tool belt.

Catalog Number	Description
US-8120-01	The USA Band Tool, Wt. 4.4 lbs (2.0 kg) - Package Quantity 1
US-8120-43	Close Quarter Tension Nut. Replaces tool tension handle when space is limited. Pacakge Quantity 1
US-8120-06	Tension Screw/Handle kit - Package Quantity 1

HEAVY DUTY BAND TOOL

The Heavy Duty TOOL must be used with all Heavy Duty Bands.
The HD TOOL is 16-1/2 inches long and is capable of up to 6,000 lbs. of tensioning.

Catalog Number	Description
US-8121-10	The Heavy Duty Tool, Wt 11.7 lbs (5.3 Kg) - Package Quantity 1

Buckles

BUCKLES

Catalog Number	Width Inches	Width mm	Weight Lbs	Weight Kg
TYPE 201 STAINLESS STEEL BUCKLES - *Package Quantity 100*				
US-8122-54	1/2	12.70	2.1	1.0
US-8122-55	5/8	15.88	2.4	1.1
US-8122-56	3/4	19.05	3.7	1.7
TYPE 316 STAINLESS STEEL BUCKLES - *Package Quantity 100*				
US-8124-54	1/2	12.70	2.1	1.0
US-8124-55	5/8	15.88	2.4	1.1
US-8124-56	3/4	19.05	3.7	1.7

HEAVY DUTY BUCKLES

HD Buckles are offered in widths and metals to correspond to HD Band.
Clamps may be double wrapped for extra strength.

Catalog Number	Width Inches	Width mm	Weight Lbs	Weight Kg
TYPE 201/301 STAINLESS STEEL - *Package Quantity 25*				
US-8124-40	3/4	19.05	1.8	0.8
US-8124-41	1	25.40	2.4	1.1
US-8124-42	1-1/4	31.75	3.2	1.4

BAND CLIPS

Catalog Number	Width Inches	Width mm	Weight Lbs	Weight Kg
TYPE 201 STAINLESS STEEL BAND CLIPS - *Package Quantity 100*				
US-8121-54	1/2	12.70	2.1	1.0
US-8121-55	5/8	15.88	2.4	1.1
US-8121-56	3/4	19.05	3.7	1.7

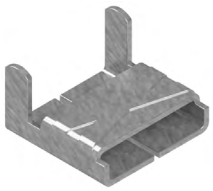

A-SCREW LOCK BUCKLES - *Stainless Steel*

Catalog Number	Width Inches	Width mm	Weight Lbs	Weight Kg	Package Quantity
US-8127-26	3/4	19.05	3.7	1.7	25

Brackets

SIGN MOUNTING BRACKETS

Catalog Number	Discription	Weight Lbs	Weight Kg
1-BOLT STRAIGHT LEG BRACKET (.075" THICK) - *Package Quantity 50*			
US-8121-00	Stainless Steel with SS Bolt, Washer and Fiber Washer	7.3	3.3
US-8120-04	Stainless Steel without Bolt or Washer		
US-8120-11	Zinc Plated Steel with Carbon Bolt, Washer and Fiber Washer	7.6	3.5
1-BOLT FLARED LEG BRACKET (.075" THICK) - *Package Quantity 50*			
US-8120-21	Stainless Steel with SS Bolt and Washer	7.6	3.5
US-8120-31	Zinc Plated Steel with Carbon Bolt, Washer and Fiber Washer	7.4	3.4

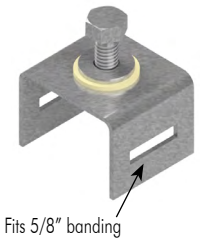

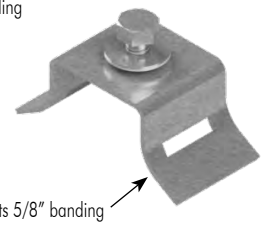

BOLTS, WASHERS for BRACKETS - *50 Per Box*

Catalog Number	Description
US-8120-02	Bolts Stainless Steel for Stainless Brackets (5/16 - 18 x 3/4" Long Hex Head)
US-8120-03	Fiber Washers

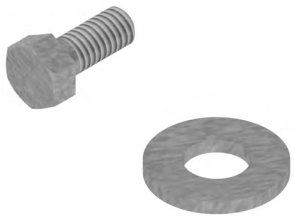

MOUNTING PLATES - *Per Each - Secure with band and buckles.*

Strapping holds this extruded aluminum mounting plate to utility poles.

Catalog Number	Description	Weight Lbs/Ea
US-8125-10	Light Duty, 1-1/2" x 4-3/4" w/ 5/8"-11 x 2" Plated Bolt	0.57
US-8125-12	Heavy Duty, 1-1/2" x 5-1/4" w/ 5/8"-11 x 2" Plated Bolt	0.78
US-8125-11	Heavy Duty, 1-1/2" x 5-1/4" w/ 5/8"-11 x 3" Plated Bolt	0.84
US-8125-13	Heavy Duty, 1-1/2" x 5-1/4" w/ 3/4"-11 x 3" Plated Bolt	1.22

USA BOLT / CLAMP - *Per Each*

Extruded aluminum fittings with zinc plated bolt, nut and washer.
To be used with USA Band for mounting pole hardware.

Catalog Number	Description	Weight Lbs/Ea
US-8500	Bolt/Clamp for use with 3/4" USA BAND band (US-8122-06). Includes plated nut, bolt 3/8" - 16 x 6" and washer.	0.43
US-8504	Bolt/Clamp for use with 1-1/4" USA BAND band (US-8124-62). Includes plated nut, bolt 5/8" - 11 x 8" and washer.	1.48

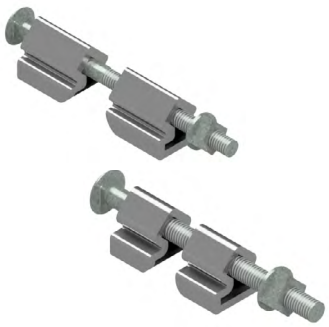

This page is intentionally left blank.

ISO 9001
www.intlcert.com

VersaPole™

The Pelco's VersaPole is a fully customizable track mounting system that allows accessories to be installed, adjusted, and removed easily. It provides a decorative solution for midblock area lighting and includes both internal and external wiring raceways. Various pole top and base options available.

Example w/ Accessories

VersaPole™ Assy, Alum w/ Track Mounting System & Base

AP-8705 - [Height] - [Pole Top] - [Base] - [Coating]

Height	Pole Top	Base	Coating
12=12′-0″ 14=14′-0″ 16=16′-0″ 18=18′-0″	Blank =Pole Cap Only 7P =7 Pin Socket PC=7 Pin Photocell SC=Shorting Cap PT2.88=2-7/8″ Post Top PT3.50=3-1/2″ Post Top	LB=LeGrande MB=Manchester HB=Hamilton	P_ _=Paint

AB-0392
Track Inserts,
ABS Black Plastic
(optional)

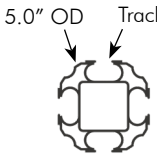

VersaPole™
Section

Pole Top Options

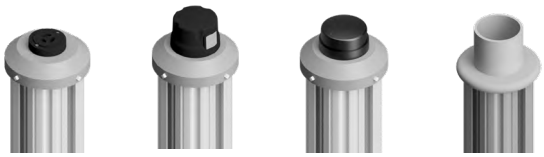

7-Pin Socket | 7-Pin Photocell | Shorting Cap | Post Top Tenon

Aluminum Base Options:

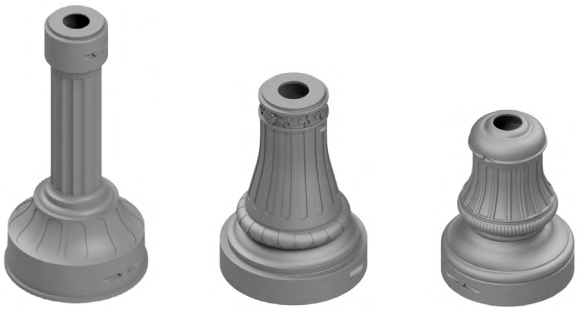

AP-0814-5.08 LeGrande | AP-0819-5.08 Manchester | AP-0816-5.08 Hamilton

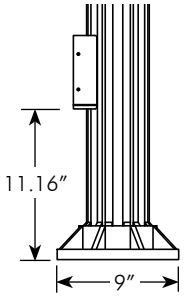

GFCI Location

AP-8705-16-HB-P59

Note: 1. See T15-2 through T15-4 for available track mounted accessories.
2. ABS Black Plastic Inserts may be purchased in various lengths to insert into open tracks.
3. See Reference Section page v for available paint colors.

VersaPole™

The Pelco's VersaPole is a fully customizable track mounting system that allows accessories to be installed, adjusted, and removed easily. It provides a decorative solution for midblock area lighting and includes both internal and external wiring raceways. Various pole top and base options available.

Luminaire Arm, Arch Braced, Alum VersaPole™

AP-7434 - Coating ☐

P_ _=Paint

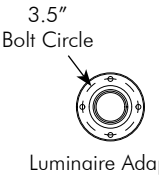

Luminaire Adapter

Luminaire Arm, Braced, Alum VersaPole™

AP-7432 - Coating ☐

P_ _=Paint

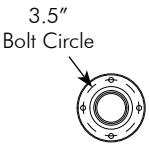

Luminaire Adapter

Luminaire Arm, Shepherds Hook, Alum VersaPole™

AP-7437 - Coating ☐

P_ _=Paint

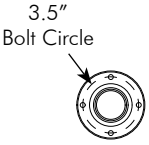

Luminaire Adapter

Adapter for Shepherds Hook, Alum VersaPole™

AP-7104 - Coating ☐

P_ _=Paint

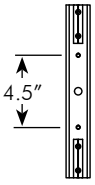

Shepards Hook Mount

Note: 1. See T15-1 for VersaPole track mounting system.
2. See Reference Section page v for available paint colors.

ISO 9001 www.intlcert.com

VersaPole™

The Pelco's VersaPole is a fully customizable track mounting system that allows accessories to be installed, adjusted, and removed easily. It provides a decorative solution for midblock area lighting and includes both internal and external wiring raceways. Various pole top and base options available.

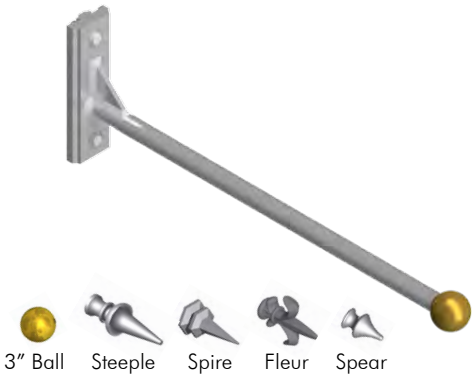

Banner Bracket, Alum VersaPole™

SH-3570 - [ ] - [ ] - [ ]

Banner Width	Finial/Color	Coating
18=18" 24=24"	BL_ _=2" Ball ST_ _=Steeple SI_ _=Spire FL_ _=Fleur SE_ _=1-1/2" Spear	P_ _=Paint

Note:
2 assemblies required for mounting banner.
Shown with ball finial. Finial may be ordered as P28 Gold or same color as assembly.

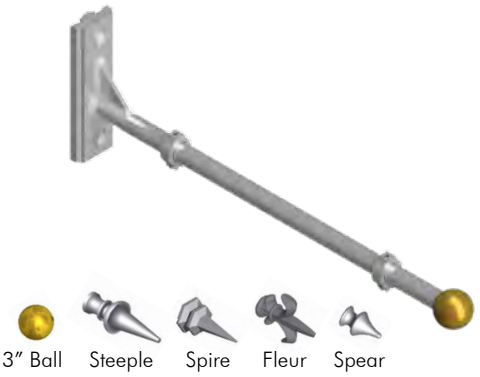

Street Name Sign Bracket, Alum VersaPole™

AP-7435 - [ ] - [ ] - [ ]

Sign Length	Finial/Color	Coating
18=18" 24=24" 30=30" 36=36" 42=42" 48-48"	BL_ _=2" Ball ST_ _=Steeple SI_ _=Spire FL_ _=Fleur SE_ _=1-1/2" Spear	P_ _=Paint

Note:
Shown with ball finial. Finial may be ordered as P28 Gold or same color as assembly.

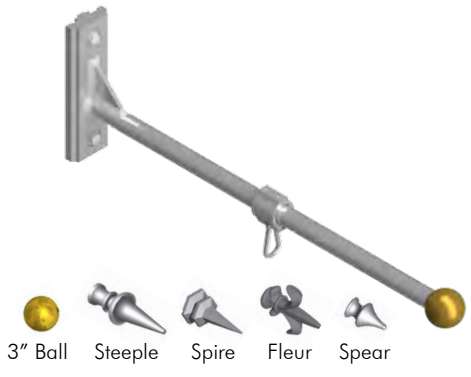

Plant Hanger, Alum VersaPole™

AP-7429 - [ ] - [ ] - [ ]

Banner Width	Finial/Color	Coating
18=18" 24=24"	BL_ _=2" Ball ST_ _=Steeple SI_ _=Spire FL_ _=Fleur SE_ _=1-1/2" Spear	P_ _=Paint

Note:
Shown with ball finial. Finial may be ordered as P28 Gold or same color as assembly.

Camera Bracket, 1-1/2" NPS, Alum VersaPole™

SH-0559 - [ ] - [ ]

Tube Length	Coating
24=24"	P_ _=Paint

Note: 1. See T15-1 for VersaPole track mounting system.
2. See Reference Section page v for available paint colors.

VersaPole™

The Pelco's VersaPole is a fully customizable track mounting system that allows accessories to be installed, adjusted, and removed easily. It provides a decorative solution for midblock area lighting and includes both internal and external wiring raceways. Various pole top and base options available.

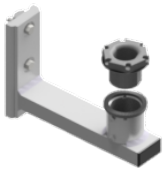

Signal Mount, Upper & Lower Arms, Alum VersaPole™

SE-3350 - [ ] Coating
P_ _=Paint

Flag Mount, for 1" Dia Rod, Alum VersaPole™

AP-7430 - [ ] Coating
P_ _=Paint

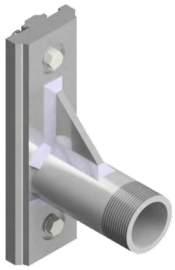

Equipment Mount, 1-1/2" NPT, Alum VersaPole™

SH-0563 - [ ] Length - [ ] Coating
04=4" P_ _=Paint

GFCI Receptacle, Weatherproof, Alum VersaPole™

AP-7431 - [ ] Coating
P_ _=Paint

Note: 1. See T15-1 for VersaPole track mounting system.
2. See Reference Section page v for available paint colors.

Bristol Series Luminaire

The Bristol Luminaires are available in metal halide, high pressure sodium, or LED and provide the look and charm of history. A unique modular electrical unit provides easy access for service. The Bristol Luminaire can be customized for a personalized style and requirement by selecting various options as indicated below.

AP- [ ] - [ ] - [ ] - [ ] - [ ] - [ ] - [ ] - [ ] - [ ]

Model - Wattage - Voltage - Photocell - Tenon Adapter - Globe - Finial/ Color - Rib/ Color - P_ _=Paint

Wattage:

AP-0207 HPS	AP-0208 MH	AP-7520 LED
50HPS	50MH	30W
100HPS	100MH	50W
150HPS	150MH	-
250HPS	250MH	-

Voltage:

AP-0207 HPS	AP-0208	AP-7520 LED
120V	120V	UNV
240V	240V	UNV
277V	277V	UNV
480V	480V	-

Note: All LED Luminaires are 120-277V

Photocell:

AP-0207 HPS	AP-0208 MH	AP-7520 LED	
NPC	NPC	NPC	None
PCS	PCS	7P	Socket Only
PC	PC	PC	w/ Photocell

Note: All LED Luminaires use 7-pin socket

Tenon Adapter:

AP-0207 HPS	AP-0208 MH	AP-7520 LED
TA	TA	TA

Note: Adapter 2-7/8" OD post to 3-1/2" ID fixture

Globe:

AP-0207 HPS	AP-0208 MH	AP-7520	
PLSM	PLSM	-	
PLLG	PLLG	PLLG	Polycarbonate Large
T3AC	T3AC	T3AC	Type III Acrylic
T5AC	T5AC	T5AC	Type V Acrylic
T3ACPR	T3ACPR	-	Type III Acrylic, Perforated Reflector
T5ACPR	T5ACPR	-	Type V Acrylic, Perforated Reflector
T3ACSR	T3ACSR	-	Type III Acrylic, Solid Reflector
T5ACSR	T5ACSR	-	Type V Acrylic, Solid Reflector
T3DS59	T3DS59	T3DS	Type III Acrylic, Dark Sky, Color
T5DS59	T5DS59	T5DS	Type V Acrylic, Dark Sky, Color

Note: 59 refers to P59 Textured Black, others colors available

Finial/Color:

AP-0207	AP-0208	AP-7520	
BL59	BL59	BL59	3" Ball, Color
ST59	ST59	ST59	Steeple, Color
SI59	SI59	SI59	Spire, Color
FL59	FL59	FL59	Fleur, Color

Note: 59 refers to P59 Textured Black, others colors available

Ribs/Color:

AP-0207	AP-0208	AP-7520	
T59	T59	T59	Tall, Color
TO59	TO59	TO59	Tall Open, Color
S59	S59	S59	Short, Color
SO59	SO59	SO59	Short Open, Color

Notes: 59 refers to P59 Textured Black, others colors available
Decorative Ribs not available on small poly globe.

AP-0207- Bristol High Pressure Sodium
AP-0208- Bristol Metal Halide
AP-7520- Bristol LED

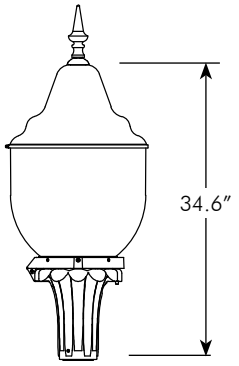

Acrylic Globe

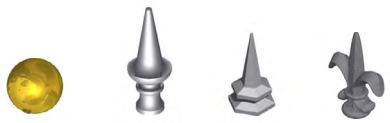

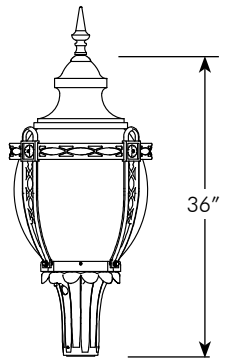

Polycarbonate Globe
w/ Decorative Ribs

Note: 1. See Reference Section for available paint colors.
2. Retrofit Kits are available to easily convert Pelco's exisitng Bristol Luminaires to LED.

Bristol Series Wall Mount Luminaire

The Bristol Wall Mount Luminaires are available in metal halide, high pressure sodium, or LED and provide the look and charm of history. A unique modular electrical unit provides easy access for service. The Bristol Luminaire can be customized for a personalized style and requirement by selecting various options as indicated below.

AP- [ ] - [ ] - [ ] - [ ] - [ ] - [ ] - [ ] - [ ]

Model | Wattage | Voltage | Photocell | Globe | Finial/ Color | Rib/ Color | P_ _=Paint

Wattage:

AP-0378	AP-0367	AP-7522
50HPS	50MH	30W
100HPS	100MH	50W
150HPS	150MH	-

Voltage:

AP-0378	AP-0367	AP-7522
120V	120V	UNV
240V	240V	UNV
277V	277V	UNV
480V	480V	-

Note: All LED Luminaires are 120-277V

Photocell:

AP-0378	AP-0367	AP-7522	
NPC	NPC	NPC	None
PCS	PCS	7P	Socket Only
PC	PC	PC	w/ Photocell

Note: All LED Luminaires use 7-pin socket

Globe:

AP-0378	AP-0367	AP-7522	
PLSM	PLSM	-	Polycarbonate Small
PLLG	PLLG	PLLG	Polycarbonate Large
T3AC	T3AC	T3AC	Type III Acrylic
T5AC	T5AC	T3AC	Type V Acrylic
T3ACPR	T3ACPR	-	Type III Acrylic, Perforated Reflector
T5ACPR	T5ACPR	-	Type V Acrylic, Perforated Reflector
T3ACSR	T3ACSR	-	Type III Acrylic, Solid Reflector
T5ACSR	T5ACSR	-	Type V Acrylic, Solid Reflector
T3DS59	T3DS59	T3DS	Type III Acrylic, Dark Sky, Color
T5DS59	T5DS59	T3DS	Type V Acrylic, Dark Sky, Color

Note: 59 refers to P59 Textured Black, others colors available

Finial/Color:

AP-0378	AP-0367	AP-7522	
BL59	BL59	BL59	3" Ball, Color
ST59	ST59	ST59	Steeple, Color
SI59	SI59	SI59	Spire, Color
FL59	FL59	FL59	Fleur, Color

Note: 59 refers to P59 Textured Black, others colors available

Ribs/Color:

AP-0378	AP-0367	AP-7522	
T59	T59	T59	Tall, Color
TO59	TO59	TO59	Tall Open, Color
S59	S59	S59	Short, Color
SO59	SO59	SO59	Short Open, Color

Note: 59 refers to P59 Textured Black, others colors available

AP-0378- Bristol High Pressure Sodium
AP-0367- Bristol Metal Halide
AP-7522- Bristol LED

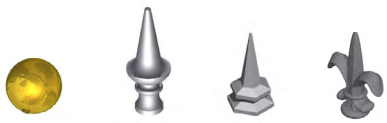

3" Ball | Steeple | Spire | Fleur

Tall | Tall Open | Short | Short Open

Note: 1. See Reference Section for available paint colors.
2. Retrofit Kits are available to easily convert Pelco's exisitng Bristol Luminaires to LED.
3. Mounting hardware not included.

ISO 9001 www.intlcert.com

LIGHTING & POLES

PELCO PRODUCTS, INC.

Windsor Series Luminaire

The Windsor Luminaires are available in metal halide, high pressure sodium, or LED. The carriage type luminaires are antique in appearance with a modular electrical unit for easy service access. The lighting panels have unique photometrics that give the appearance of multiple light sources. The Windsor Luminaire can be customized by selecting various options as indicated below.

AP- [ ] - [ ] - [ ] - [ ] - [ ] - [ ]

Model | Wattage | Voltage | Photocell | Finial/ Color | P_ _=Paint

AP-0216- Windsor High Pressure Sodium
AP-0217- Windsor Metal Halide
AP-7521- Windsor LED

Wattage:

AP-0216	AP-0217	AP-7521
50HPS	-	30W
100HPS	100MH	50W
-	150MH	-
-	175MH	-

AP-0216	AP-0217	AP-7521
120V	120V	UNV
208V	208V	UNV
240V	240V	UNV
277V	277V	UNV
480V	480V	480V

Note: All LED Luminaires are 120-277V

Photocell:

AP-0216	AP-0217	AP-7521	
NPC	NPC	NPC	None
PCS	PCS	7P	Socket Only
PC	PC	PC	w/ Photocell

Note: All LED Luminaires use 7-pin socket

AP-0216	AP-0217	AP-7521	
BL59	BL59	BL59	3" Ball, Color
ST59	ST59	ST59	Steeple, Color
SI59	SI59	SI59	Spire, Color
FL59	FL59	FL59	Fleur, Color

Note: 59 refers to P59 Textured Black, others colors available

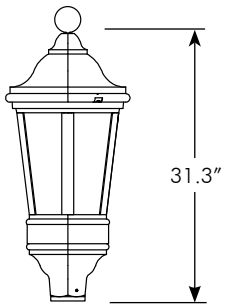

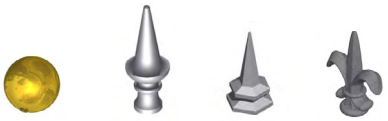

Note: 1. See Reference Section for available paint colors.
2. Retrofit Kits are available to easily convert Pelco's exisitng Windsor Luminaires to LED.

This page is intentionally left blank.

ISO 9001
www.intlcert.com

LED Luminaire Retrofits

Existing Bristol, Windsor, or Renassaince Luminaires can easily be converted to LED by replacing the electrical modules with LED Retrofit Kits.

Bristol LED Retrofit Kit, Alum

AP-0655 - [Wattage] - [Voltage] - [Photocell Socket] - [Coating]

Wattage	Voltage	Photocell Socket	Coating
30W=30 Watt 50W=50 Watt	UNV=120-277V	NPC=None 7P=7-Pin Socket	PNC=Process No Color P_ _=Paint

Bristol LED Retrofit Kit w/ Top Plate for 7-Pin Alum

AP-0657 - [Wattage] - [Voltage] - [Photocell Socket] - [Coating]

Wattage	Voltage	Photocell Socket	Coating
30W=30 Watt 50W=50 Watt	UNV=120-277V	NPC=None 7P=7-Pin Socket	PNC=Process No Color P_ _=Paint

Windsor LED Retrofit Kit, Alum

AP-0658 - [Wattage] - [Voltage] - [Photocell Socket] - [Coating]

Wattage	Voltage	Photocell Socket	Coating
30W=30 Watt 50W=50 Watt	UNV=120-277V	NPC=None 7P=7-Pin Socket	PNC=Process No Color

Note: 1. See Reference Section page v for available paint colors.

Arms, Column, and Wall Mounts

Pelco's twin arms can be mounted to a fluted or tapered pole. The twin arms and wall mount can accommodate the Bristol or Windsor luminaire and are available with a variety of finials. Pelco's decorative column mount is availiable with an optional collar for additional ornamentation.

Twin Arm Assy, Fits 2-7/8" Pole Tenon, Alum w/ 3-1/2" Luminaire Tenons, 33" CTC

AP-8203 - [Finial/Color] - [Paint]

Finial/Color: BL_ _=2" Ball, SI_ _=Spire, SE_ _=Steeple, FL_ _=Fleur

Paint: P_ _=Paint

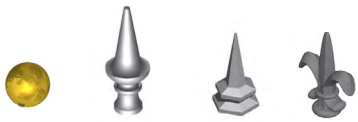

Note:
Finial may be ordered as P28 Gold or same color as assembly, i.e., AP-8203-BL28-P59, for Gold Ball finial and Textured Black assembly.

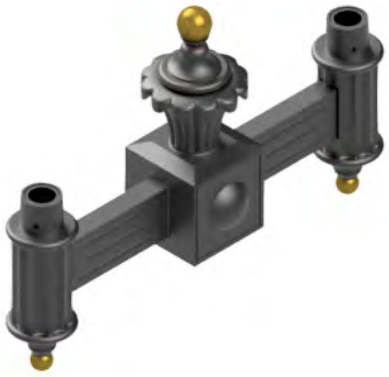

Twin Arm Assy, Fits 2-7/8" Pole Tenon, Alum w/ 3-1/2" Luminaire Tenons, 35" CTC

AP-8374 - [Finial/Color] - [Paint]

Finial/Color: BL_ _=2" Ball, SI_ _=Spire, SE_ _=Steeple, FL_ _=Fleur

Paint: P_ _=Paint

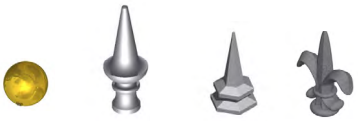

Note:
Finial may be ordered as P28 Gold or same color as assembly, i.e., AP-8374-BL28-P59, for Gold Ball finial and Textured Black assembly.

Wall Mount Arm Assy, Alum 16-1/2" Offset from Wall

AP-8230 - [Tenon] - [Finial/Color] - [Paint]

Tenon: 2.8=2-13/16" OD, 3.5=3-1/2" OD

Finial/Color: BL_ _=2" Ball, SI_ _=Spire, SE_ _=Steeple, FL_ _=Fleur

Paint: P_ _=Paint

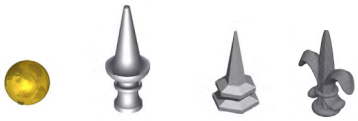

Note:
Finial may be ordered as P28 Gold or same color as assembly, i.e., AP-8230-BL28-P59, for Gold Ball finial and Textured Black assembly.

Column Mount, Alum w/ 3-1/2" Luminaire Tenon 8-1/2" Bolt Circle for 1/2" Hardware

AP-8195 - [Collar] - [Paint]

Collar: Blank=No Collar, OC=Ornamental Collar

Paint: P_ _=Paint

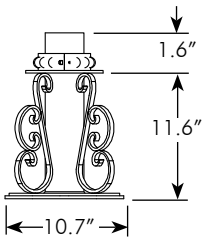

AP-8195-OC

Note: 1. Mounting hardware not included.
2. See Reference Section page v for available paint colors.

ISO 9001
www.intlcert.com

Post Top Luminaire Poles

Pelco manufactures a variety of Lighting Poles, straight, fluted, and tapered, that are available for post top mounted luminaires. Poles vary in size, shape, height, and material, and are designed to fit any requirement.

Light Pole, 3-1/2" OD Steel w/ Hand Hole

AP-0220 - [Height] - [Coating]

Height: 05=5′, 08=8′, 10=10′, 12=12′, 14=14′

Coating: P_ _=Paint

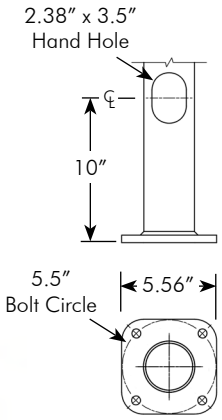

Light Pole, 3-1/2" OD w/ 2-7/8" OD Tenon Steel w/ Hand Hole

AP-0221- [Height] - [Coating]

Height: 05=5′, 08=8′, 10=10′, 12=12′, 14=14′

Coating: P_ _=Paint

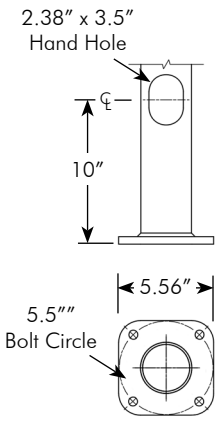

ABS Bases:

AP-0804-3.5-6.7
Old Towne I

AP-0803-3.5-6.7
Rochester

AP-0810-3.5-6.7
Hamilton

Anchors:

AP-1046-GLV
Anchor Bolts Set,
1/2"-13NC

AP-1049-GLV
Anchor Bolt Cage,
1/2"-13NC

Aluminum Bases:

AP-0801-3.5
Old Towne I

AP-0814-3.5
LeGrande

AP-0811-3.5
Country
Club

AP-0820-3.5
Huntington

PB-5416-3.5
Octagonal

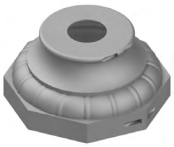

AP-0817-3.5
Oxford

Note: 1. For additional information on Bases see page T15-27 through T15-31.
2. For Anchors see sections T11 and T12.
3. See Reference Section page v for available paint colors.

Post Top Luminaire Poles

Pelco manufactures a variety of Lighting Poles, straight, fluted, and tapered, that are available for post top mounted luminaires. Poles vary in size, shape, height, and material, designed to fit any need.

Light Pole, 3-1/2" OD Steel w/ Lower GFCI Option

AP-0302 - [Height] - [GFCI] - [Coating]

Height	GFCI	Coating
05=5′ 08=8′ 10=10′ 12=12′ 14=14′	Blank=w/o Kit GFCI=w/ Kit	P__=Paint

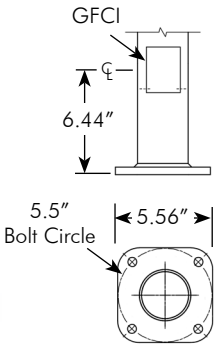

Light Pole, 3-1/2" OD Steel w/ GFCI Option

AP-0376 - [Height] - [GFCI] - [Coating]

Height	GFCI	Coating
05=5′ 08=8′ 10=10′ 12=12′ 14=14′	Blank=w/o Kit GFCI=w/ Kit	P__=Paint

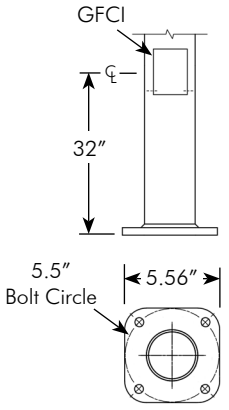

ABS Bases:

AP-0804-3.5-6.7
Old Towne I
(fits AP-0376 only)

AP-0803-3.5-6.7
Rochester

AP-0810-3.5-6.7
Hamilton

Anchors:

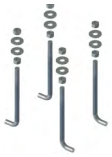

AP-1046-GLV
Anchor Bolts Set,
1/2″-13NC

AP-1049-GLV
Anchor Bolt Cage,
1/2″-13NC

Aluminum Bases:

AP-0801-3.5
Old Towne I
(fits AP-0376 only)

AP-0814-3.5
LeGrande
(fits AP-0376 only)

AP-0811-3.5
Country Club

AP-0820-3.5
Huntington
(fits AP-0376 only)

PB-5416-3.5
Octagonal
(fits AP-0376 only)

AP-0817-3.5
Oxford
(fits AP-0376 only)

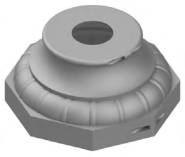

Note: 1. For additional information on Bases see page T15-27 through T15-31.
2. For Anchors see sections T11 and T12.
3. See Reference Section page v for available paint colors.

Post Top Luminaire Poles

Pelco manufactures a variety of Lighting Poles, straight, fluted, and tapered, that are available for post top mounted luminaires. Poles vary in size, shape, height, and material, designed to fit any need.

Light Pole, 4" Fluted, Alum w/ 3-1/2" OD x 2-7/8" Long Tenon, Hand Hole & Grounding Lug

AP-8122 - [GFCI] - [Height] - [Coating]

GFCI: See Chart
Height: 10=10′, 12=12′, 14=14′
Coating: P_ _=Paint

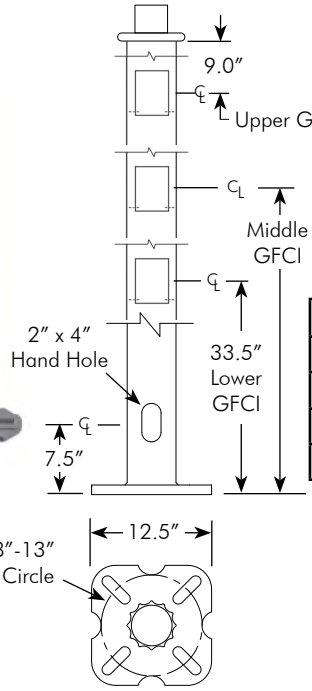

P/N Suffix	GFCI
Blank	None
-GU	Upper GFCI
-GM	Middle GFC
-GFCI	Lower GFCI

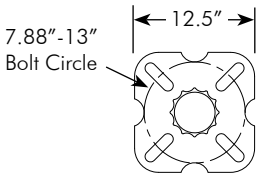

Light Pole, 4" Fluted, Alum w/ 3-1/2" OD x 2-7/8" Long Tenon, Hand Hole & Grounding Lug

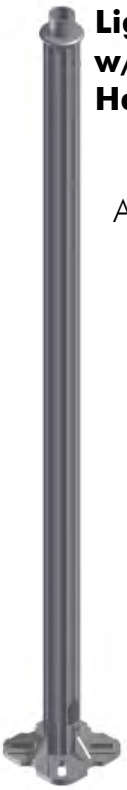

AP-8468 - [Height] - [Coating]

Height: 15=15′, 18=18′, 20=20′
Coating: P_ _=Paint

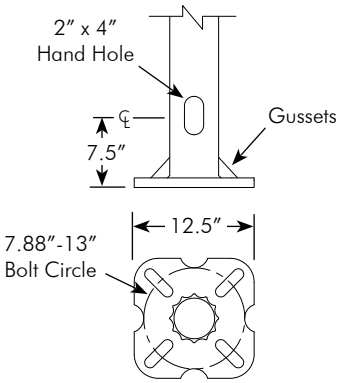

Anchors:

AP-1019-GLV
Anchor Bolts Set,
3/4"-10NC

AP-1089-GLV
Anchor Bolt Cage,
3/4"-10NC

Aluminum Bases:

AP-0814-5.09
LeGrande

AP-0819-5.09
Manchester

AP-0816-5.09
Hamilton

PB-5414-5.09
Octagonal

AP-0817-5.09
Oxford

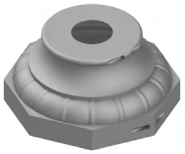

Note: 1. For additional information on Bases see page T15-27 through T15-31.
2. For Anchors see sections T11 and T12.
3. See Reference Section page v for available paint colors.

This page is intentionally left blank.

ISO 9001
www.intlcert.com

Post Top Luminaire Poles

Pelco manufactures a variety of Lighting Poles, straight, fluted, and tapered, that are available for post top mounted luminaires. Poles vary in size, shape, height, and material, designed to fit any need.

Light Pole, Fluted Tapered, Steel w/ 3-1/2" OD x 3-1/2" Long Tenon, GFCI Option

AP-8700 - [Height] - [GFCI] - [Coating]

Height	GFCI	Coating
8=8′ 10=10′	Blank=w/o Kit GFCI=w/ Kit	GLV=Galvanized P_ _=Paint

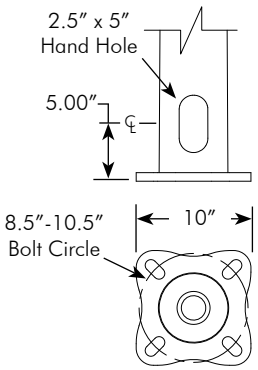

ABS Bases:

AP-0809-5.63-13.13
Rochester II
(w/o GFCI)

AP-0810-5.81-13.13
Hamilton

Anchors:

AP-1019-GLV
Anchor Bolts Set,
3/4"-10NC

AP-1089-GLV
Anchor Bolt Cage,
3/4"-10NC

Aluminum Bases:

AP-0814-5.63
LeGrande
(w/o GFCI)

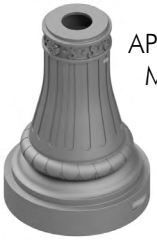

AP-0819-5.75
Manchester

AP-0816-5.75
Hamilton

AP-0817-6F
Oxford

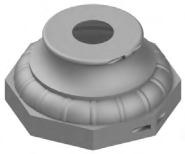

Note: 1. For additional information on Bases see page T15-27 through T15-31.
2. For Anchors see sections T11 and T12.
3. See Reference Section page v for available paint colors.

Post Top Luminaire Poles

Pelco manufactures a variety of Lighting Poles, straight, fluted, and tapered, that are available for post top mounted luminaires. Poles vary in size, shape, height, and material, designed to fit any need.

Direct Bury Light Pole, Tapered Steel, 11 Gauge
5.8" Butt x 19' Tall
3-1/2" OD x 3" Long Tenon
w/ Hand Hole Cover & Grounding Lug

AP-3056 - [ ] Coating
P__=Paint

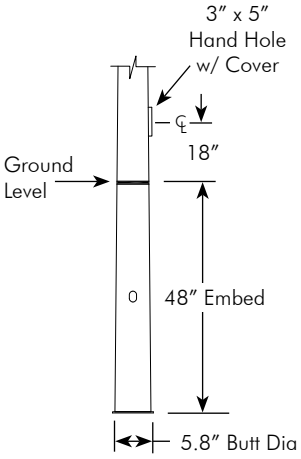

ABS Bases:

AP-0809-4.88-5.63
Rochester II

AP-0803-4.88-5.63
Rochester I

Aluminum Bases:

AP-0814-4.88
LeGrande

AP-0811-5.00
Country Club

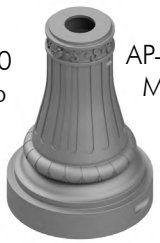
AP-0819-5.00
Manchester

AP-0816-5.00
Hamilton

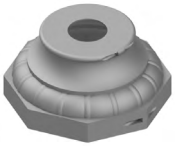
AP-0817-5.25
Oxford

Note: 1. For additional information on Bases see page T15-27 through T15-31.
2. See Reference Section page v for available paint colors.

Post Top Luminaire Poles

Pelco manufactures a variety of Lighting Poles, straight, fluted, and tapered, that are available for post top mounted luminaires. Poles vary in size, shape, height, and material, designed to fit any need.

Direct Bury Light Pole, Tapered Steel, 11 Gauge
7.5" Butt x 25' Tall
3-1/2" OD x 3" Long Tenon
w/ Hand Hole Cover & Grounding Lug

AP-3057 - [Coating]
P_ _=Paint

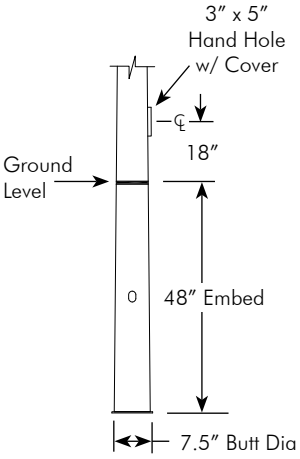

ABS Bases:

AP-0809-6.56-7.25
Rochester II

Aluminum Bases:

AP-0802-6.63
Ornamental

AP-0819-6.69
Manchester

AP-0816-6.75
Hamilton

AP-0817-6.88
Oxford

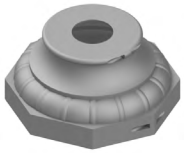

Note: 1. For additional information on Bases see page T15-27 through T15-31.
2. See Reference Section page v for available paint colors.

Majestic Roadway Luminaire Poles

The Majestic Roadway Lighting Poles are available for single or twin luminaires and with 6′ or 8′ arms fabricated with a 29″ rise. The fluted tapered steel pole offers great strength and durability, with the Hamilton base completing the classic decorative look.

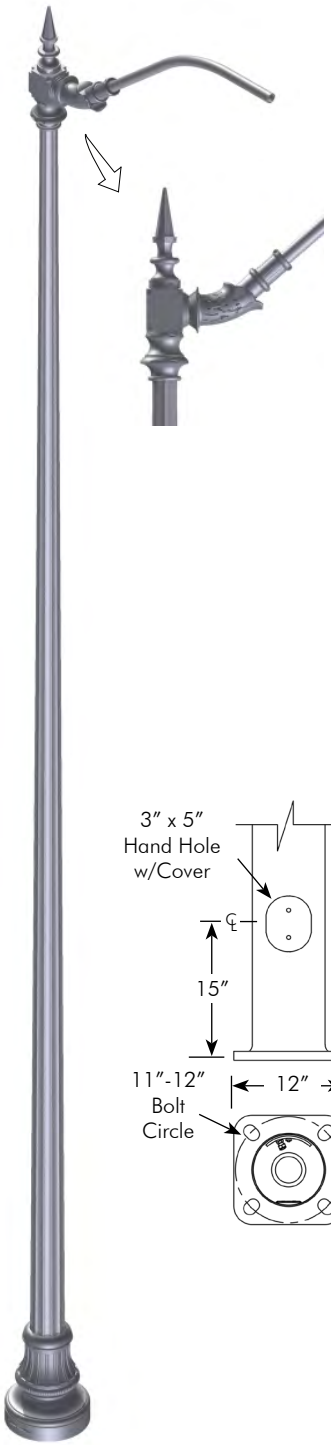

Pole Height	Arm Length	Arm	Part Number	Allowable EPA (ft^2) per arm at 90 mph with max. luminaire weight of 60 lbs	Allowable EPA (ft^2) per arm at 100 mph with max. luminaire weight of 60 lbs
30′-0″	6′-0″	Single	AP-8327	7.0	5.6
	8′-0″	Single	AP-8347	4.6	3.6

Notes:

Majestic Poles come standard with Hamilton Base. Optional base w/ Riser for use with PB-5431 break-away bolts can be specify by adding -BR, i.e., AP-8327-BR-P59.

EPA=Projected area of luminaire multiplied by coefficient of drag

Compliant with AASHTO 2013

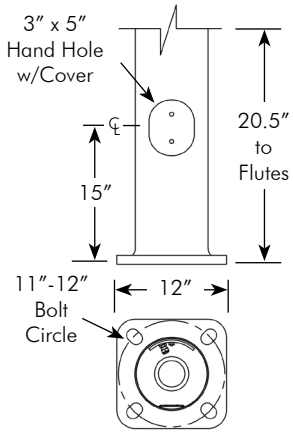

Anchors:

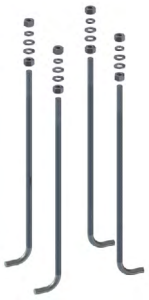

AP-1007-3-GLV
Anchor Bolts Set,
1″-8NC
w/ Template

AP-3129-GLV
Anchor Bolt Cage,
1″-8NC

Aluminum Bases:

AP-0816-7.75
Hamilton
(Standard)

AP-0823-7.75
Hamilton w/ Riser
(Optional)

Note: 1. For additional information on Bases see page T15-27 through T15-31.
2. For Anchors see sections T11 and T12.
3. See Reference Section page v for available paint colors.

Majestic Roadway Luminaire Poles

The Majestic Roadway Lighting Poles are available for single or twin luminaires and with 6′ or 8′ arms fabricated with a 29″ rise. The fluted tapered steel pole offers great strength and durability, with the Hamilton base completing the classic decorative look.

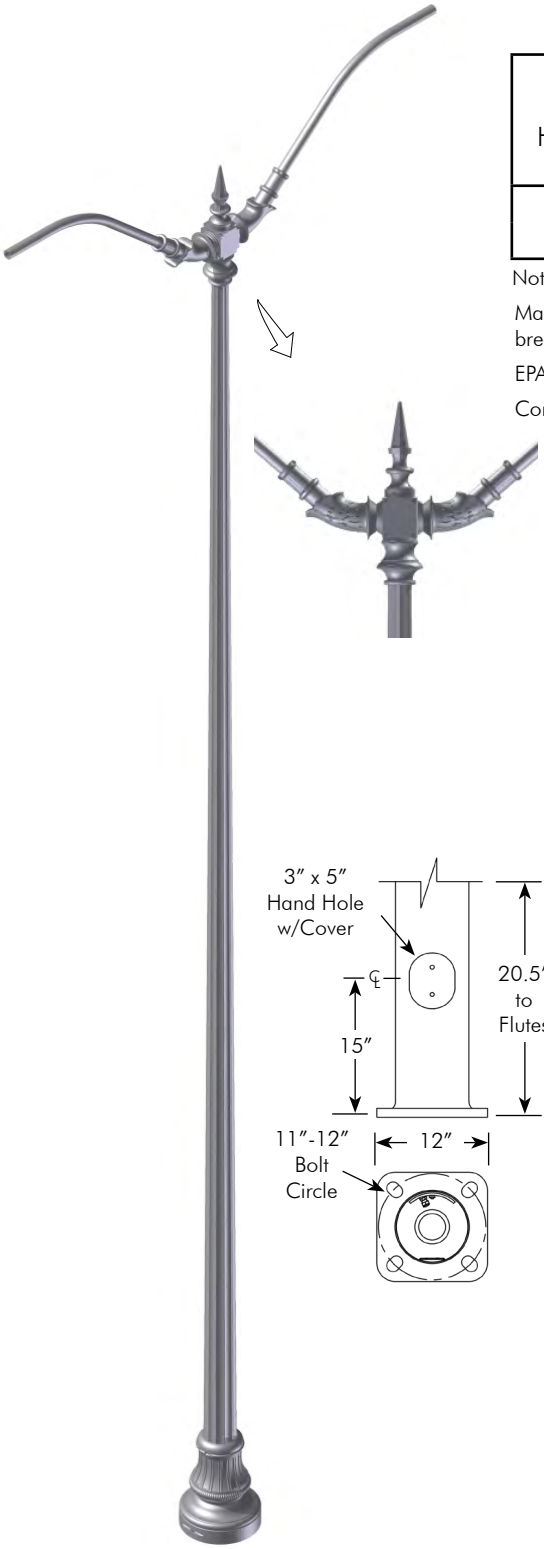

Pole Height	Arm Length	Arm	Part Number	Allowable EPA (ft^2) per arm at 90 mph with max. luminaire weight of 60 lbs	Allowable EPA (ft^2) per arm at 100 mph with max. luminaire weight of 60 lbs
30′-0″	6′-0″	Single	AP-8328	7.0	5.6
	8′-0″	Single	AP-8348	4.6	3.6

Notes:

Majestic Poles come standard with Hamilton Base. Optional base w/ Riser for use with PB-5431 break-away bolts can be specify by adding -BR, i.e., AP-8328-BR-P59.

EPA=Projected area of luminaire multiplied by coefficient of drag

Compliant with AASHTO 2013

Anchors:

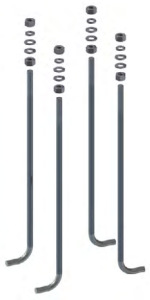

AP-1007-3-GLV
Anchor Bolts Set,
1″-8NC
w/ Template

AP-3129-GLV
Anchor Bolt Cage,
1″-8NC

Aluminum Bases:

AP-0816-7.75
Hamilton
(Standard)

AP-0823-7.75
Hamilton w/ Riser
(Optional)

Note: 1. For additional information on Bases see page T15-27 through T15-31.
2. For Anchors see sections T11 and T12.
3. See Reference Section page v for available paint colors.

Majestic Roadway Luminaire Poles

The Majestic Roadway Lighting Poles are available for single or twin luminaires and with 6′ or 8′ arms fabricated with a 29″ rise. The fluted tapered steel pole offers great strength and durability, with the Hamilton base completing the classic decorative look. Available with upper, middle, or lower GFCI and handle hole.

With GFCI Options

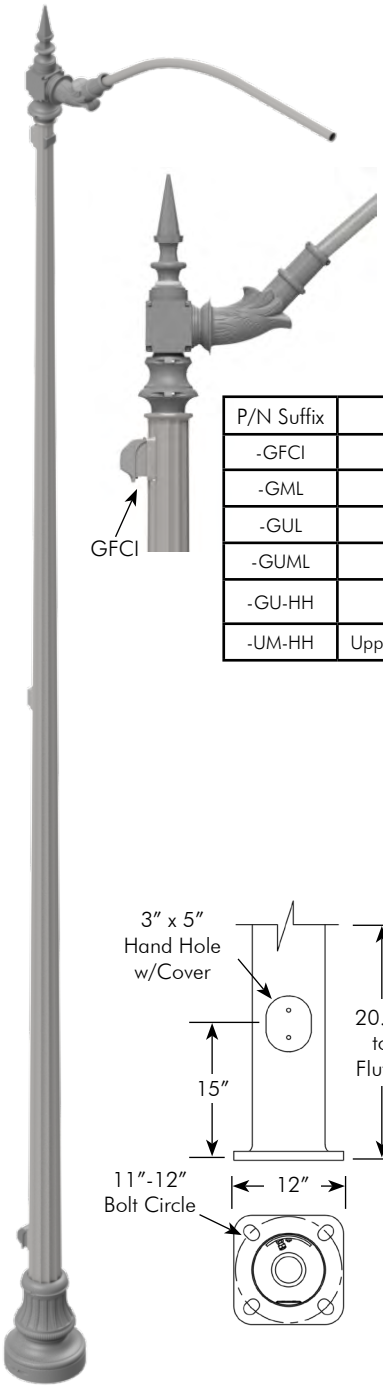

Pole Height	Arm Length	Arm	Part Number	Allowable EPA (ft^2) per arm at 90 mph with max. luminaire weight of 60 lbs	Allowable EPA (ft^2) per arm at 100 mph with max. luminaire weight of 60 lbs
20′-0″	6′-0″	Single	AP-8495	-	-
30′-0″	8′-0″	Single	AP-8381	4.6	3.6

Notes:

Majestic Poles come standard with Hamilton Base. Optional base w/ Riser for use with PB-5431 break-away bolts can be specify by adding -BR, i.e., AP-8381-BR-P59.

For GFCI and Hand Hole options see chart. Specify by adding suffix to part number , i.e., AP-8495-GFCI-P59 for a lower GFCI only. Lower GFCI not available with base riser option.

EPA=Projected area of luminaire multiplied by coefficient of drag

Compliant with AASHTO 2013

P/N Suffix	GFCI & Hand Hole	GFCI Qty
-GFCI	Lower GFCI only	1
-GML	Middle & Lower GFCI	2
-GUL	Upper & Lower GFCI	2
-GUML	Upper, Middle, & Lower GFCI	3
-GU-HH	Upper GFCI & Lower Hand Hole	1
-UM-HH	Upper & Middle GFCI & Lower Hand Hole	2

Anchors:

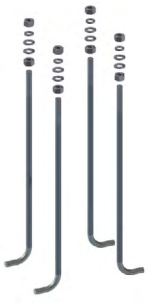

AP-1007-3-GLV
Anchor Bolts Set,
1″-8NC
w/ Template

AP-3129-GLV
Anchor Bolt Cage,
1″-8NC

Aluminum Bases:

AP-0816-7.75
Hamilton
(Standard)

AP-0823-7.75
Hamilton w/ Riser
(Optional)

Note: 1. For additional information on Bases see page T15-27 through T15-31.
2. For Anchors see sections T11 and T12.
3. See Reference Section page v for available paint colors.

ISO 9001 www.intlcert.com

Majestic Roadway Luminaire Poles

The Majestic Roadway Lighting Poles are available for single or twin luminaires and with 6′ or 8′ arms fabricated with a 29″ rise. The fluted tapered steel pole offers great strength and durability, with the Hamilton base completing the classic decorative look. Available with upper, middle, or lower GFCI and handle hole.

With GFCI Options

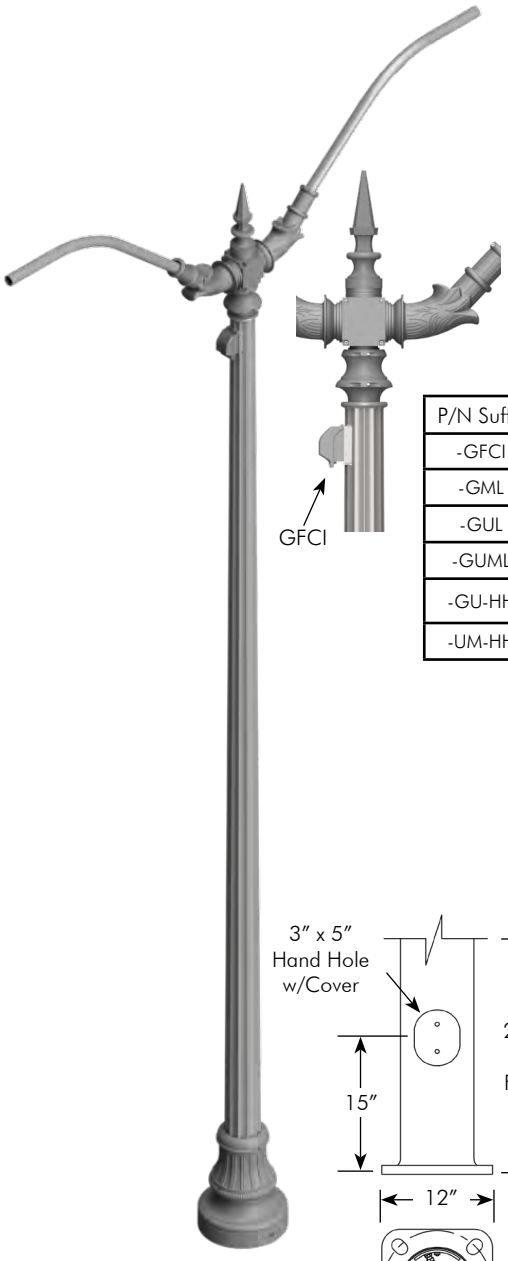

Pole Height	Arm Length	Arm	Part Number	Allowable EPA (ft^2) per arm at 90 mph with max. luminaire weight of 60 lbs	Allowable EPA (ft^2) per arm at 100 mph with max. luminaire weight of 60 lbs
20′-0″	6′-0″	Twin	AP-8496	-	-
30′-0″	8′-0″	Twin	AP-8382	4.6	3.6

Notes:

Majestic Poles come standard with Hamilton Base. Optional base w/ Riser for use with PB-5431 break-away bolts can be specify by adding -BR, i.e., AP-8382-BR-P59.

For GFCI and Hand Hole options see chart. Specify by adding suffix to part number , i.e., AP-8496-GFCI-P59 for a lower GFCI only. Lower GFCI not available with base riser option.

EPA=Projected area of luminaire multiplied by coefficient of drag

Compliant with AASHTO 2013

P/N Suffix	GFCI & Hand Hole	GFCI Qty
-GFCI	Lower GFCI only	1
-GML	Middle & Lower GFCI	2
-GUL	Upper & Lower GFCI	2
-GUML	Upper, Middle, & Lower GFCI	3
-GU-HH	Upper GFCI & Lower Hand Hole	1
-UM-HH	Upper & Middle GFCI & Lower Hand Hole	2

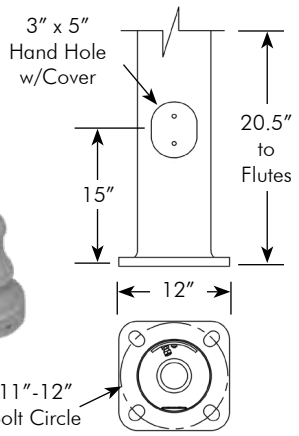

Anchors:

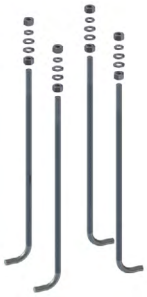

AP-1007-3-GLV
Anchor Bolts Set,
1″-8NC
w/ Template

AP-3129-GLV
Anchor Bolt Cage,
1″-8NC

Aluminum Bases:

AP-0816-7.75
Hamilton
(Standard)

AP-0823-7.75
Hamilton w/ Riser
(Optional)

Note: 1. For additional information on Bases see page T15-27 through T15-31.
2. For Anchors see sections T11 and T12.
3. See Reference Section page v for available paint colors.

Traditional Roadway Luminaire Poles

The Traditional Roadway Luminaire Poles are range from 22-1/2′ through 40′ heights. They are provided with either 6′ or 8′ single or twin arms fabricated with a 26″ rise and decorative scroll. Steel tapered poles offer an affordable graceful look that can accept a variety of decorative bases or be provided with simple nut covers.

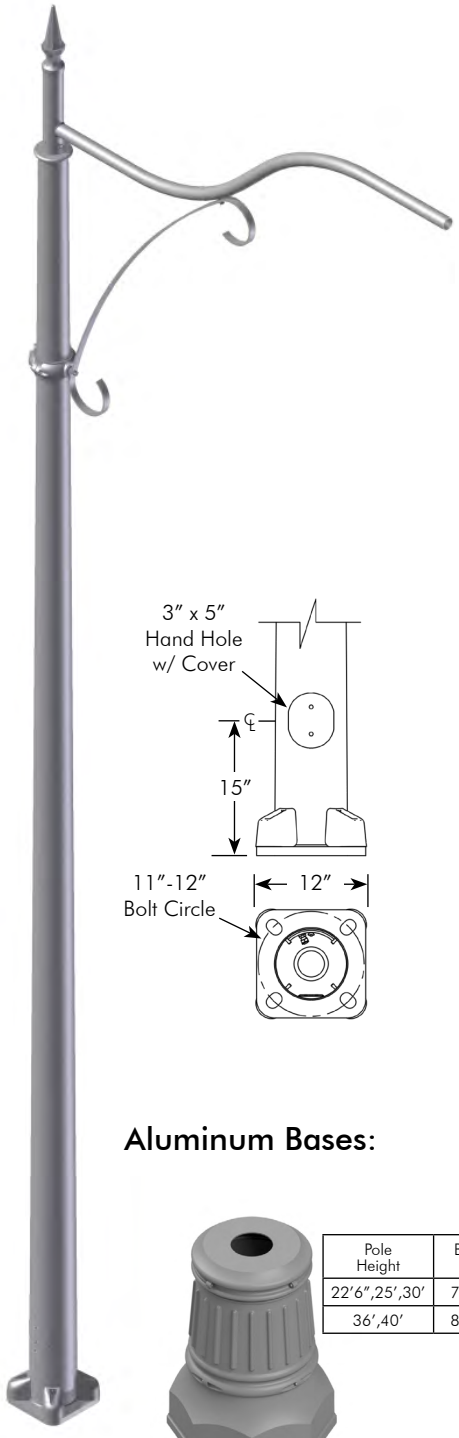

Pole Height	Arm Length	Arm	Part Number	Allowable EPA (ft^2) per arm at 90 mph with max. luminaire weight of 60 lbs	Allowable EPA (ft^2) per arm at 100 mph with max. luminaire weight of 60 lbs
22′-6″	8′-0″	Single	AP-8489	5.0	3.9
25′-0″	8′-0″	Single	AP-8556	4.8	3.8
30′-0″	8′-0″	Single	AP-8301	4.6	3.6
35′-0″	6′-0″	Single	AP-8578	-	-
40′-0″	6′-0″	Single	AP-8577	-	-

Note:
Bolt/Nut Covers are available. Specify by adding -BC in the part number, i.e., AP-8301-BC-P59
EPA=Projected area of luminaire multiplied by coefficient of drag
Compliant with AASHTO 2013

Anchors:

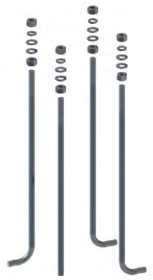

AP-1007-3-GLV
1″-8NC
(22′6″, 25′, 30′ Poles)

AP-1020-GLV
1-1/4″-7NC
(36′, 40′ Poles)

AP-3129-GLV
1″-8NC
(22′6″, 25′, 30′ Poles)

AP-3146-GLV
1-1/4″-7NC
(36′, 40′ Poles)

Aluminum Bases:

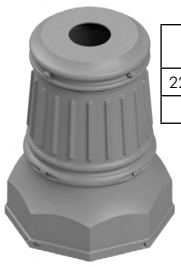

Pole Height	Base ID
22′6″,25′,30′	7.69″
36′,40′	8.69″

PB-5384 Rochester

Pole Height	Base ID
22′6″,25′,30′	7.75″
36′,40′	8.75″

AP-0802 Ornamental

Hamilton Base	Pole Height	Base ID
AP-0816	22′6″,25′,30′	7.80″
AP-0823	36′,40′	8.69″

Hamilton

Pole Height	Base ID
22′6″,25′,30′	8.00″
36′,40′	9.00″

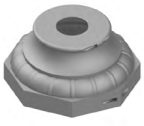

AP-0817 Oxford

Note: 1. For additional information on Bases see page T15-27 through T15-31.
2. For Anchors see sections T11 and T12.
3. See Reference Section page v for available paint colors.

Traditional Roadway Luminaire Poles

The Traditional Roadway Luminaire Poles are range from 22-1/2′ through 40′ heights. They are provided with either 6′ or 8′ single or twin arms fabricated with a 26″ rise and decorative scroll. Steel tapered poles offer an affordable graceful look that can accept a variety of decorative bases or be provided with simple nut covers.

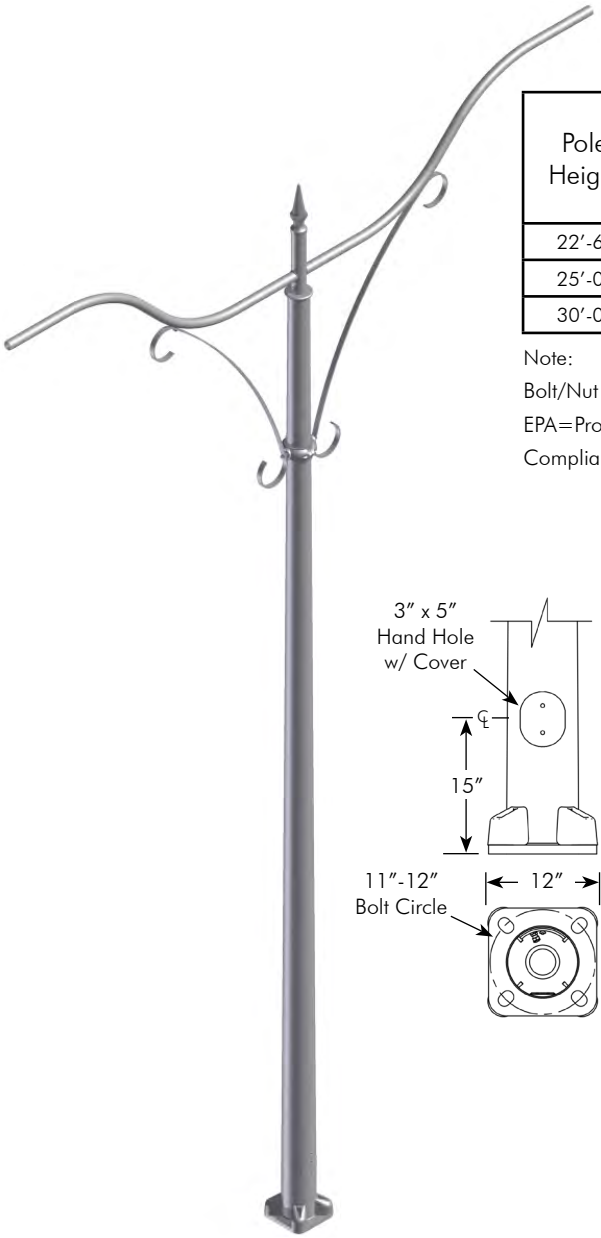

Pole Height	Arm Length	Arm	Part Number	Allowable EPA (ft^2) per arm at 90 mph with max. luminaire weight of 60 lbs	Allowable EPA (ft^2) per arm at 100 mph with max. luminaire weight of 60 lbs
22′-6″	8′-0″	Twin	AP-8490	5.0	3.9
25′-0″	8′-0″	Twin	AP-8563	4.8	3.8
30′-0″	8′-0″	Twin	AP-8302	4.6	3.6

Note:

Bolt/Nut Covers are available. Specify by adding -BC in the part number, i.e., AP-8302-BC-P59

EPA=Projected area of luminaire multiplied by coefficient of drag

Compliant with AASHTO 2013

Anchors:

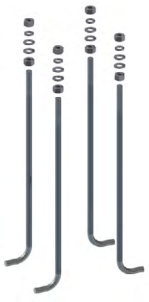

AP-1007-3-GLV
Anchor Bolt Set,
1″-8NC

AP-3129-GLV
Anchor Bolt Cage,
1″-8NC

Aluminum Bases:

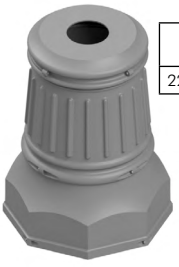

Pole Height	Base ID
22′6″,25′,30′	7.69″

PB-5384 Rochester

Pole Height	Base ID
22′6″,25′,30′	7.75″

AP-0802 Ornamental

Pole Height	Base ID
22′6″,25′,30′	7.80″

Hamilton

Pole Height	Base ID
22′6″,25′,30′	8.00″

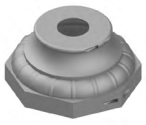

AP-0817 Oxford

Note: 1. For additional information on Bases see page T15-27 through T15-31.
2. For Anchors see sections T11 and T12.
3. See Reference Section page v for available paint colors.

Simplex Roadway Luminaire Poles

The Simplex Roadway Luminaire Poles are available in 25′ through 40′ heights. They are provided with either 6′ or 8′ single or twin arms fabricated with a 24″ rise. The steel tapered poles can accept a variety of decorative bases or be provided with simple nut covers.

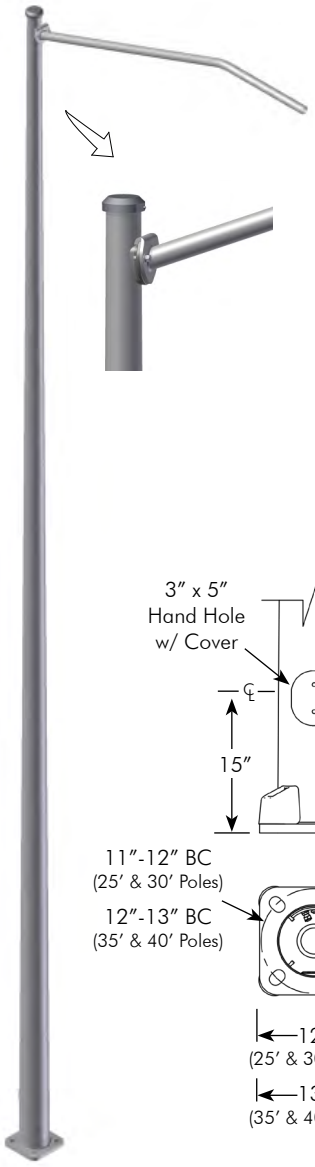

Pole Height	Arm Length	Arm	Part Number	Allowable EPA (ft^2) per arm at 90 mph with max. luminaire weight of 60 lbs	Allowable EPA (ft^2) per arm at 100 mph with max. luminaire weight of 60 lbs
25′-0″	6′-0″	Single	AP-8571-25-6	6.8	5.4
	8′-0″	Single	AP-8571-25-8	4.5	3.5
30′-0″	6′-0″	Single	AP-8571-30-6	6.5	5.2
	8′-0″	Single	AP-8571-30-8	4.3	3.3
35′-0″	6′-0″	Single	AP-8571-35-6	6.3	5.0
	8′-0″	Single	AP-8571-35-8	4.1	3.2
40′-0″	6′-0″	Single	AP-8571-40-6	6.1	4.8
	8′-0″	Single	AP-8571-40-8	4.0	3.1

Note:

Bolt/Nut Covers are available. Specify by adding -BC in the part number, i.e., AP-8571-30-6-BC-GLV.

EPA=Projected area of luminaire multiplied by coefficient of drag

Compliant with AASHTO 2013

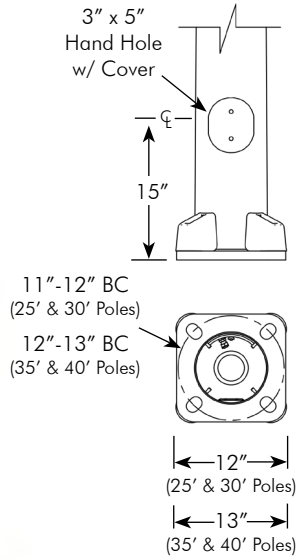

Anchors:

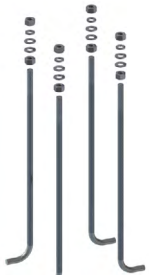

AP-1007-3-GLV
1″-8NC
(25′ & 30′ Poles)

AP-1020-GLV
1-1/4″-7NC
(35′ & 40′ Poles)

AP-3129-GLV
1″-8NC
(25′ & 30′ Poles)

AP-3146-GLV
1-1/4″-7NC
(35′ & 40′ Poles)

Aluminum Bases:

Pole Height	Base ID
25′	7.13″
30′	7.63″
35′	8.13″
40′	8.63″

PB-5384 Rochester

Pole Height	Base ID
25′	7.25″
30′	7.75″
35′	8.25″
40′	8.75″

AP-0802 Ornamental

Pole Height	Base ID
25′	7.31″
30′	7.88″
35′	N/A
40′	N/A

AP-0816 Hamilton

Pole Height	Base ID
25′	7.50″
30′	8.00″
35′	8.44″
40′	9.00″

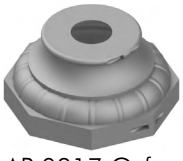

AP-0817 Oxford

Note: 1. For additional information on Bases see page T15-27 through T15-31.
2. For Anchors see sections T11 and T12.
3. See Reference Section page v for available paint colors.

Simplex Roadway Luminaire Poles

The Simplex Roadway Luminaire Poles are available in 25′ through 40′ heights. They are provided with either 6′ or 8′ single or twin arms fabricated with a 24″ rise. The steel tapered poles can accept a variety of decorative bases or be provided with simple nut covers.

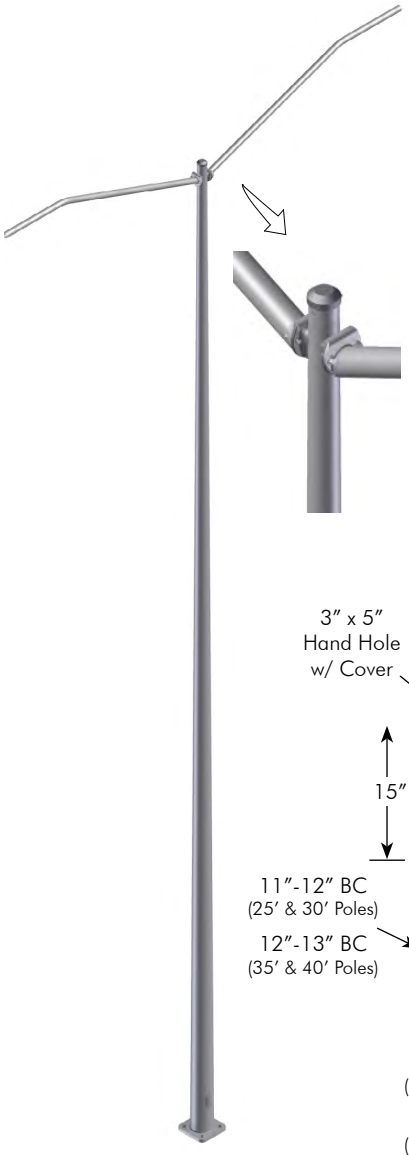

Pole Height	Arm Length	Arm	Part Number	Allowable EPA (ft^2) per arm at 90 mph with max. luminaire weight of 60 lbs	Allowable EPA (ft^2) per arm at 100 mph with max. luminaire weight of 60 lbs
25′-0″	6′-0″	Twin	AP-8572-25-6	6.8	5.4
	8′-0″	Twin	AP-8572-25-8	4.5	3.5
30′-0″	6′-0″	Twin	AP-8572-30-6	6.5	5.2
	8′-0″	Twin	AP-8572-30-8	4.3	3.3
35′-0″	6′-0″	Twin	AP-8572-35-6	6.3	5.0
	8′-0″	Twin	AP-8572-35-8	4.1	3.2
40′-0″	6′-0″	Twin	AP-8572-40-6	6.1	4.8
	8′-0″	Twin	AP-8572-40-8	4.0	3.1

Note:
Bolt/Nut Covers are available. Specify by adding -BC in the part number, i.e., AP-8572-30-6-BC-GLV.
EPA=Projected area of luminaire multiplied by coefficient of drag
Compliant with AASHTO 2013

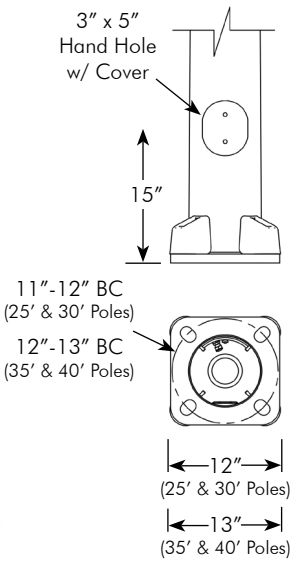

Anchors:

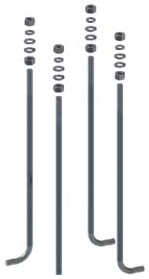

AP-1007-3-GLV
1″-8NC
(25′ & 30′ Poles)

AP-1020-GLV
1-1/4″-7NC
(35′ & 40′ Poles)

AP-3129-GLV
1″-8NC
(25′ & 30′ Poles)

AP-3146-GLV
1-1/4″-7NC
(35′ & 40′ Poles)

Aluminum Bases:

Pole Height	Base ID
25′	7.13″
30′	7.63″
35′	8.13″
40′	8.63″

PB-5384 Rochester

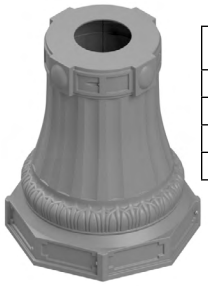

Pole Height	Base ID
25′	7.25″
30′	7.75″
35′	8.25″
40′	8.75″

AP-0802 Ornamental

Pole Height	Base ID
25′	7.31″
30′	7.88″
35′	N/A
40′	N/A

AP-0816 Hamilton

Pole Height	Base ID
25′	7.50″
30′	8.00″
35′	8.44″
40′	9.00″

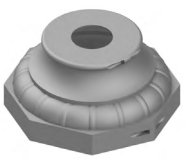

AP-0817 Oxford

Note: 1. For additional information on Bases see page T15-27 through T15-31.
2. For Anchors see sections T11 and T12.
3. See Reference Section page v for available paint colors.

This page is intentionally left blank.

ISO 9001
www.intlcert.com

ABS Plastic Bases

Pelco ABS Plastic Bases are manufactured from an ultraviolet inhibited material that provides protections against U.V. degradation which ensures years of lasting beauty. A variety of styles and sizes are available. Lightweight and easy installation.

AP-0804 - [Top ID] - [Bottom ID] - PNC

Top ID: 3.5=3-1/2″ | Bottom ID: 7.5=7-1/2″

Note: Top Opening: 3-1/2″ max
Bottom Opening: 7-1/2″ max

Rochester I Base Assy, Black ABS Plastic 41″ High x 15-11/16″ Across Points

AP-0803 - [Top ID] - [Bottom ID] - PNC

Top ID: 5.75=5-3/4″ | Bottom ID: 12.0=12″

Note: Top Opening: 5-3/4″ max
Bottom Opening: 12″ max

Rochester II Base Assy, Black ABS Plastic 41″ High x 19″ Across Points

AP-0809 - [Top ID] - [Bottom ID] - PNC

Top ID: 9.0=9″ | Bottom ID: 15.0=15″

Note: Top Opening: 9″ max
Bottom Opening: 15″ max

Hamilton Base Assy, Black ABS Plastic 21″ High x 16-1/8″ Base Dia

AP-0810 - [Top ID] - [Bottom ID] - PNC

Top ID: 6.5= 6-1/2″ | Bottom ID: 14.5= 14-1/2″

Note: Top Opening: 6-1/2″ max
Bottom Opening: 14-1/2″ max

Note: 1. Refer to individual pole pages for cross reference for proper fit of base and pole.
2. ABS Plastic Bases are manufactured from an ultraviolet inhibited material that provides protections against U.V. degradation.

Aluminum Bases

Pelco has several different Aluminum Base designs. A variety of styles and sizes are available to fit any specific requirement.

Old Town I Base Assy, Alum
23-1/2" High x 9-1/4" Across Points

AP-0801 - [Base ID] - [Coating]

Base ID: 2.38=2-3/8" | 2.88"=2-7/8" | 3.5=3-1/2"

Coating: PNC=Process No Color | P__=Paint

Note: Top Opening: 2-3/8" min to 3-1/2" max
Bottom Opening: 7-1/2" max

Country Club Base Assy, Alum
28" High x 13-5/8" OD

AP-0811 - [Base ID] - [Coating]

Base ID: 3.5=3-1/2" | 4.5=4-1/2" | 3F= 3" Fluted

Coating: PNC=Process No Color | P__=Paint

Note: Top Opening: 3-1/2" min to 4-1/2" max
Bottom Opening: 12" max

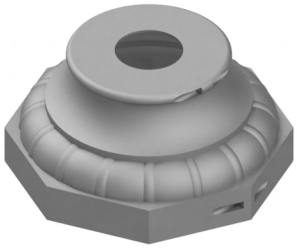

Oxford Base Assy, Alum
9" High x 19-1/4" Across Points

AP-0817 - [Base ID] - [Coating]

Base ID: 8.5= 8-1/2" | 4F=4" Fluted | 6F=6" Fluted

Coating: PNC=Process No Color | P__=Paint

Note: Top Opening: 3-1/2" min to 8-1/2" max
Bottom Opening: 17" max

Note: 1. Refer to individual pole pages for cross reference for proper fit of base and pole.
2. See Reference Section page v for available paint colors.

ISO 9001 www.intlcert.com

Aluminum Bases

Pelco has several different Aluminum Base designs. A variety of styles and sizes are available to fit any specific requirement.

Huntington Base Assy, Alum
15-3/4" High x 11-1/4" OD

AP-0820 - [Base ID] - [Coating]

Base ID: 3.5=3-1/2", 4.0=4"
Coating: PNC=Process No Color, P_ _=Paint

Note: Top Opening: 3" min to 4" max
Bottom Opening: 10-3/4" max

Manchester Base Assy w/ Door, Alum
27" High x 18-1/2" OD

AP-0819 - [Base ID] - [Coating]

Base ID: 4.0=4", 7.0=7", 4F=4" Fluted
Coating: PNC=Process No Color, P_ _=Paint

Note: Top Opening: 4" min to 7" max
Bottom Opening: 11-1/2" max

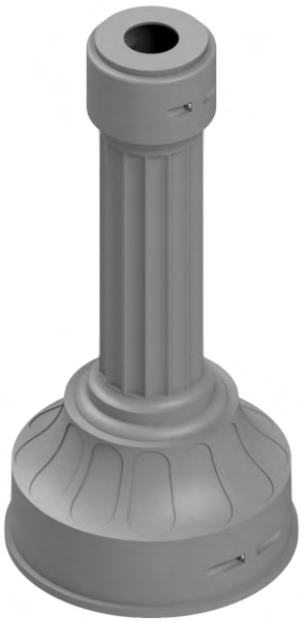

LeGrande Base Assy, Alum
38" High x 18-1/2" OD

AP-0814 - [Base ID] - [Coating]

Base ID: 3.5=3-1/2", 4.5=4-1/2", 5.5=5-1/2", 3F= 3" Fluted, 4F=4" Fluted
Coating: PNC=Process No Color, P_ _=Paint

Note: Top Opening: 3-1/2" min to 5-3/4" max
Bottom Opening: 17" max

Note: 1. Refer to individual pole pages for cross reference for proper fit of base and pole.
2. See Reference Section page v for available paint colors.

ISO 9001 www.intlcert.com

Aluminum Bases

Pelco has several different Aluminum Base designs. A variety of styles and sizes are available to fit any specific requirement.

Hamilton Base Assy, Alum
24" High x 18-1/2" OD

AP-0816 - [Base ID] - [Coating]

Base ID:
4.06=4-1/16"
4.5=4-1/2"
5.5=5-1/2"
8.5=8-1/2" (max)

Coating:
PNC=Process No Color
P_ _=Paint

Note: Top Opening: 4" min to 8-1/2" max
Bottom Opening: 16-3/4" max

Hamilton Base Assy w/ Riser, Alum
24" High x 18-1/2" OD

AP-0823 - [Base ID] - [Coating]

Base ID:
4.06=4-1/16"
4.5=4-1/2"
5.5=5-1/2"
8.5=8-1/2" (max)

Coating:
PNC=Process No Color
P_ _=Paint

Note: Top Opening: 4" min to 8-1/2" max
Bottom Opening: 16-3/4" max
To be used with PB-5431 break-away bolts.

Octagonal Base Assy, Alum
14-3/16" High x 17-13/16" Across Points

PB-5416 - [Base ID] - [Coating]

Base ID:
2.88=2-7/8"
3.5=3-1/2"
4=4"
4.5=4-1/2"
5= 5"

Coating:
PNC=Process No Color
P_ _=Paint

Note: Top Opening: 2-7/8" min to 5" max
Bottom Opening: 16" max

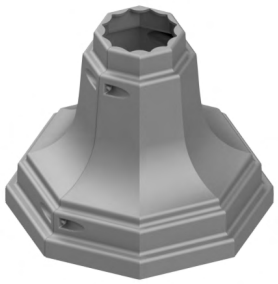

Octagonal Base Assy, for 4" Fluted Pole, Alum
14" High x 17-13/16" Across Points

PB-5414 - [Coating]

Coating:
PNC=Process No Color
P_ _=Paint

Note: Top Opening: 4" Fluted Only
Bottom Opening: 16" max

Note: 1. Refer to individual pole pages for cross reference for proper fit of base and pole.
2. See Reference Section page v for available paint colors.

ISO 9001 www.intlcert.com

Aluminum Bases

Pelco has several different Aluminum Base designs. A variety of styles and sizes are available to fit any specific requirement.

Rochester Base Assy, Alum
36" High x 28" Across Points

PB -5384 - [Base ID] - [Coating]

Base ID:
8.0=8"
10.63=10-5/8"
14.13=14-1/8"
16"= 16"

Coating:
PNC=Process No Color
P_ _=Paint

Note: Top Opening: 8" min to 16" max
Bottom Opening: 26" max

Ornamental Base Assy, Alum
32" High x 28-3/4" Across Points

AP-0802 - [Base ID] - [Trim] - [Coating]

Base ID:
8.0=8"
10.0=10"
12.0= 12"

Trim:
T_ _=Trim Color

Coating:
PNC=Process No Color
P_ _=Paint

Note: Top Opening: 6" min to 12" max
Bottom Opening: 23" max

Square Cover Assy, 2-Piece, Alum
5-1/4" High x 16" Square

PB-5399 - [Base ID] - [Coating]

Base ID:
4.5=4-1/2"
6.8=6-13/16"
7.5=7-1/2"
8.0=8-1/2"

Coating:
PNC=Process No Color
P_ _=Paint

Note: Top Opening: 4-1/2" min to 8-5/8" max
Bottom Opening: 15" max

Note: 1. Refer to individual pole pages for cross reference for proper fit of base and pole.
2. See Reference Section page v for available paint colors.

Lighting Arms

Pelco manufactures a variety of Lighting Arms that are available for single or twin luminaires. Both 1-5/8" and 2-3/8" diameter arms are availble in aluminum and steel.

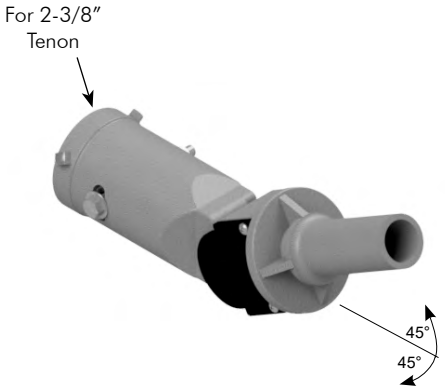

Lumi-Brac, Adjustable View 2-3/8" OD Tenon Mount, Alum

SP-6350 - [Tenon] - [Coating]

Tenon: Blank= 1-5/8" OD x 4" | 1.9=1-7/8" OD x 7" | 2.38=2-3/8" OD x 7"

Coating: PNC= Process No Color | P_ _=Paint

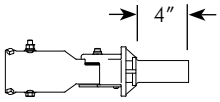

Note:
For mounting a single security light or Wi Fi antenna.

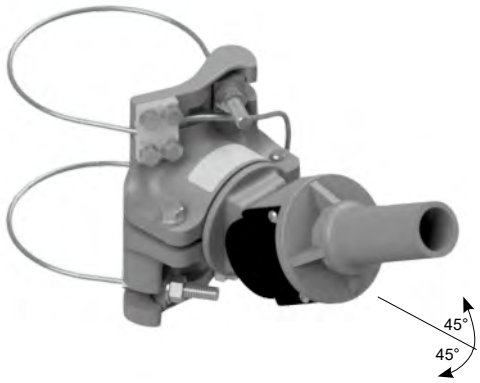

Lumi-Brac, 1-5/8" Dia Tenon, Adjustable View Cable Mount, Alum

SP-6351 - [Cable Length] - [Cable] - [Coating]

Cable Length: See Table

Cable: Blank=Galv | SS=Stainless

Coating: PNC= Process No Color | P_ _=Paint

Cable Length:	62"	84"	96"	110"	120"	132"	144"	220"	280"
Maximum Pole Dia:	7.0"	10.5"	12.4"	14.6"	16.2"	18.2"	20.1"	32.2"	35.0"
Pole Dia w/ Ty-back:	4.5"	7.6"	9.6"	11.8"	13.4"	15.3"	17.2"	29.3"	35.0"

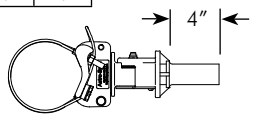

Note:
For mounting a single security light or Wi Fi antenna.

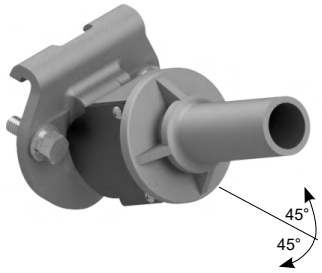

Lumi-Brac, 1-5/8" Dia Tenon, Adjustable View Simplex Mount, Alum

SP-6353 - [Coating]

Coating: PNC= Process No Color | P_ _=Paint

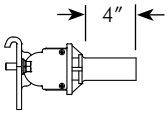

Note:
For mounting a single security light or Wi Fi antenna.

Note: 1. See Reference Section page v for available paint colors.

ISO 9001 www.intlcert.com

Lighting Arms

Pelco manufactures a variety of Lighting Arms that are available for single or twin luminaires. Both 1-5/8″ and 2-3/8″ diameter arms are availble in aluminum and steel.

Mounting Bracket Assy, Double Luminaire Arm, 2-3/8″ Dia, Galvanized Steel

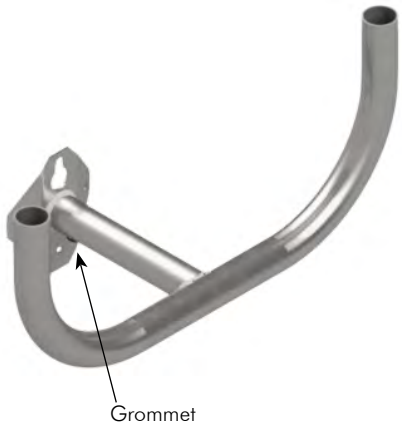

SP-6308 - [Coating]

GLV= Galvanized
P_ _=Paint

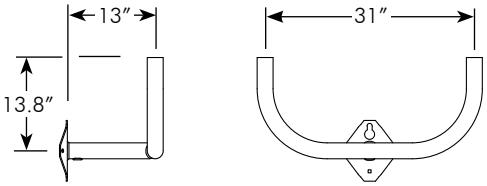

Note:
Bullhorn mounting brackets mount with an offset from the wood pole. Includes rubber grommet on the underneath side for wiring. Mounting hardware not included.

Mounting Arm Assy, Flood Light, 2-3/8″ OD, Galvanized Steel

SP-6349-GLV

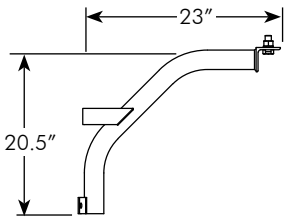

Note:
Mounting arm with a 2-3/8″ OD pipe for mounting a single flood light with the 3/4″-10NC supplied hardware.

Note: 1. See Reference Section page v for available paint colors.

Lighting Arms

Pelco manufactures a variety of Lighting Arms that are available for single or twin luminaires. Both 1-5/8" and 2-3/8" diameter arms are availble in aluminum and steel.

Luminaire Support Arm, 1-5/8" Dia, Upsweep, Galvanized Steel

SP-6272 - [ ]

Coating

GLV= Galvanized
P_ _=Paint

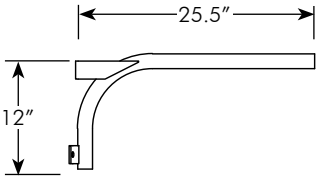

Note:
For mounting a single security light or Wi Fi antenna.
Mounting hardware not included.

Luminaire Mounting Arm, 1-5/8" Dia w/ Hardware, 1-5/8" Dia, Alum

SP-6348 - [ ] - PNC

Arm Length

16=16"
24=14"
30=30"

Part Number	EPA (ft^2) per arm at 120 mph with max. luminaire weight of 30 lbs
SP-6348-16-PXX	3.0
SP-6348-24-PXX	2.0
SP-6348-30-PXX	3.6

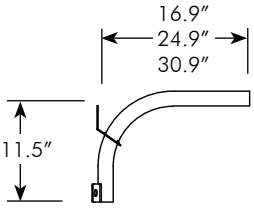

Note:
For mounting a single security light or Wi Fi antenna.
Includes three 3/8"-16 x 3" hex head lag bolts and flat washers.

Note: 1. See Reference Section page v for available paint colors.

Lighting Arms

Pelco manufactures a variety of Lighting Arms that are available for single or twin luminaires. Both 1-5/8″ and 2-3/8″ diameter arms are availble in aluminum and steel.

Luminaire Mounting Arm, 2-3/8″ OD Galvanized Steel

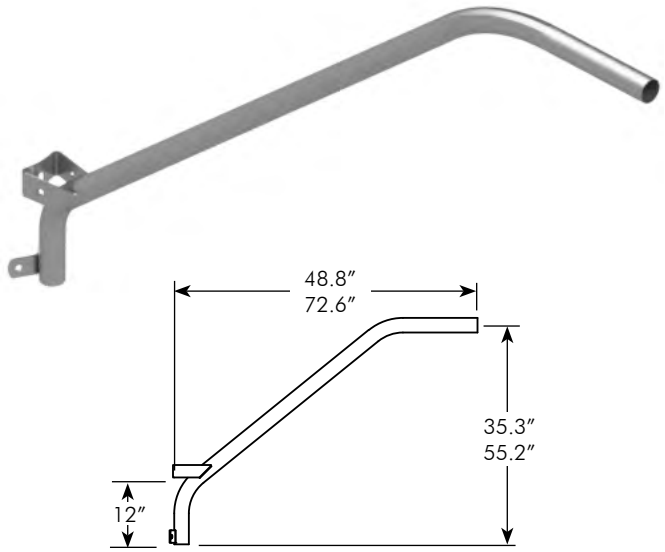

SP-6309 - [ ]

Coating
GLV=Galvanized
P_ _=Paint

Note:
For mouting a single luminaire on 2-3/8″ OD x 6′ schedule 10 pipe. Mounting hardware not included. Galvanized or powder coated.

Luminaire Arm, Clamp-on For 4″-5″ Dia Pole 3″ Sch 40 w/ 2-3/8″ Dia x 8″ Tenon, Steel

AP-3001 - [ ] - [ ]

Arm Length
72=6′
96=8′
120=10′
144=12′

Coating
GLV=Galvanized
P_ _=Paint

Luminaire Arm, Clamp-on For 5-1/2″ to 7-1/2″ Dia Pole 3″ Sch 40 w/ 2-3/8″ Dia x 8″ Tenon, Steel

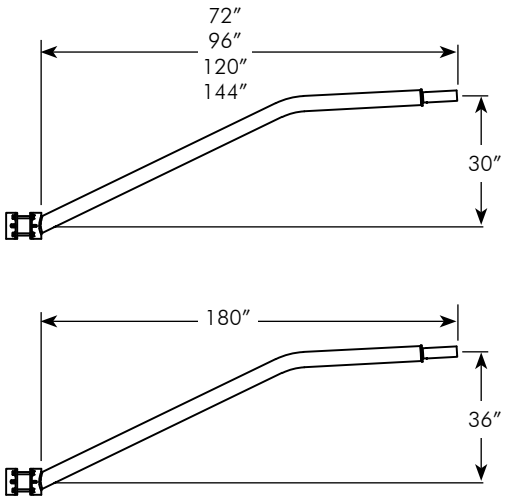

AP-3002 - [ ] - [ ]

Arm Length
96=8′
120=10′
144=12′
180=15′

Coating
GLV=Galvanized
GLV-P_ _=Paint

Note:
For mounting a single luminaire onto the 2-3/8″ OD x 8″ long tenon. Includes 1/2″-13NC hardware for attaching arm to the pole. Galvanized or powder coated.

Note: 1. See Reference Section page v for available paint colors.

This page is intentionally left blank.

ISO 9001
www.intlcert.com

Banner Brackets

Pelco has a wide variety of mounting bracket for banners and flags. Choose from ornamental hubs, banded mini-bracs, or flat mounted hubs. Banner bracs for square poles are also available, as well as articulating arms for collapsing against the pole when not in use.

Banner Mounting Bracket, Alum Hinged Single Arm,

	Pole Dia	Banner Width	Finial/Color	Coating
SH-3551 -	☐	☐	☐	☐
	2.38=2-3/8" 2.88=2-7/8" 3.50=3-1/2" 4.06=3" Fluted 4.50=4-1/2" 5.08=4" Fluted 5.56=5-9/16"	18=18" 24=24" 30=30" 36=36"	BL_ _=2" Ball ST_ _=Steeple SI_ _=Spire FL_ _=Fleur SE_ _=1-1/2" Spear	P_ _=Paint

Note:
Finial may be ordered as P28 Gold or same color as assembly, i.e., SH-3551-3.50-24-BL28-P33, for Gold Ball finial and Gloss Black assembly.

Banner Mounting Bracket, Alum Hinged Articulating Single Arm

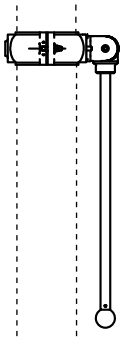

	Pole Dia	Banner Width	Finial/Color	Coating
SH-3547 -	☐	☐	☐	☐
	2.38=2-3/8" 2.88=2-7/8" 3.50=3-1/2" 4.06=3" Fluted 4.50=4-1/2" 5.08=4" Fluted 5.56=5-9/16"	18=18" 24=24" 30=30" 36=36"	BL_ _=2" Ball ST_ _=Steeple SI_ _=Spire FL_ _=Fleur SE_ _=1-1/2" Spear	P_ _=Paint

Note:
Finial may be ordered as P28 Gold or same color as assembly, i.e., SH-3547-3.50-24-BL28-P33, for Gold Ball finial and Gloss Black assembly.

Banner Mounting Bracket, Alum Hinged Double Arm,

	Pole Dia	Banner Width	Banner Width	Finial/Color	Coating
SH-3556 -	☐	☐	☐	☐	☐
	2.38=2-3/8" 2.88=2-7/8" 3.50=3-1/2" 4.06=3" Fluted 4.50=4-1/2" 5.08=4" Fluted 5.56=5-9/16"	18=18" 24=24" 30=30" 36=36"	18=18" 20=21" 24=24" 30=30" 36=36"	BL_ _=2" Ball ST_ _=Steeple SI_ _=Spire FL_ _=Fleur SE_ _=1-1/2" Spear	P_ _=Paint

Note:
Finial may be ordered as P28 Gold or same color as assembly, i.e., SH-3556-3.50-24-24-BL28-P33, for Gold Ball finial and Gloss Black assembly.

Note: 1. 2 bracket assemblies are required for mounting a banner.
2. See Reference Section page v for available paint colors.

Banner Brackets

Pelco has a wide variety of mounting bracket for banners and flags. Choose from ornamental hubs, banded mini-bracs, or flat mounted hubs. Banner bracs for square poles are also available, as well as articulating arms for collapsing against the pole when not in use.

3" Ball Steeple Spire Fleur Spear

Banner Mounting Bracket, Alum Band Mini-Brac

	Banner Width		BandLength/Painted		Finial/Color		Coating
SH-3520 -	☐	-	☐	-	☐	-	☐
	18=18″ 24=24″ 30=30″ 36=36″		29=29″ 42=42″ 29PB=29″ Painted 42PB=42″ Painted		BL_ _=2″ Ball ST_ _=Steeple SI_ _=Spire FL_ _=Fleur SE_ _=1-1/2″ Spear		P_ _=Paint

Band Length:	29″	42″
Maximum Pole Dia:	7.3″	11.5″

Note:
Finial may be ordered as P28 Gold or same color as assembly, i.e., SH-3520-42PB-24-BL28-P33, for Gold Ball finial and Gloss Black assembly. If painted band is required, band will be painted same color as assembly.

3" Ball Steeple Spire Fleur Spear

Banner Mounting Bracket, Alum Band Mini-Brac, Articulating Arm

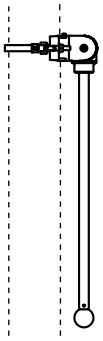

	Banner Width		Band Length/Painted		Finial/Color		Coating
SH-3525 -	☐	-	☐	-	☐	-	☐
	18=18″ 24=24″ 30=30″ 36=36″		29=29″ 42=42″ 29PB=29″ Painted 42PB=42″ Painted		BL_ _=2″ Ball ST_ _=Steeple SI_ _=Spire FL_ _=Fleur SE_ _=1-1/2″ Spear		P_ _=Paint

Band Length:	29″	42″
Maximum Pole Dia:	7.3″	11.5″

Note:
Finial may be ordered as P28 Gold or same color as assembly, i.e., SH-3551-3.50-24-BL28-P33, for Gold Ball finial and Gloss Black assembly. If painted band is required, band will be painted same color as assembly.

Note: 1. 2 bracket assemblies are required for mounting a banner.
2. See Reference Section page v for available paint colors.

Banner Brackets

Pelco has a wide variety of mounting bracket for banners and flags. Choose from ornamental hubs, banded mini-bracs, or flat mounted hubs. Banner bracs for square poles are also available, as well as articulating arms for collapsing against the pole when not in use.

Banner Mounting Bracket, Alum Universal Hub Mount

SH-3523 - [Banner Width] - [Finial/Color] - [Coating]

Banner Width	Finial/Color	Coating
18=18"	BL_ _=2" Ball	P_ _=Paint
24=24"	ST_ _=Steeple	
30=30"	SI_ _=Spire	
36=36"	FL_ _=Fleur	
	SE_ _=1-1/2" Spear	

Note:
Finial may be ordered as P28 Gold or same color as assembly, i.e., SH-3523-24-BL28-P33, for Gold Ball finial and Gloss Black assembly.

Banner Mounting Bracket, Alum For Square Poles, Articulating Arm

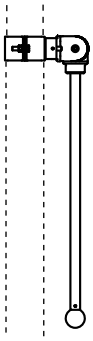

SH-3532 - [Pole Size] - [Banner Width] - [Finial/Color] - [Coating]

Pole Size	Banner Width	Finial/Color	Coating
4=4" Square	18=18"	BL_ _=2" Ball	P_ _=Paint
5=2-7/8" Square	24=24"	ST_ _=Steeple	
6.63=6-5/8" Square	30=30"	SI_ _=Spire	
	36=36"	FL_ _=Fleur	
		SE_ _=1-1/2" Spear	

Note:
Finial may be ordered as P28 Gold or same color as assembly, i.e., SH-3532-4-24-BL28-P33, for Gold Ball finial and Gloss Black assembly.

Banner & Flag Mounting Bracket, Alum Articulating Double Arm

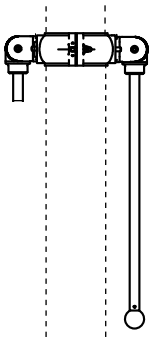

SH-3571 - [Pole Dia] - [Banner Width] - [Finial/Color] - [Coating]

Pole Dia	Banner Width	Finial/Color	Coating
2.38=2-3/8"	18=18"	BL_ _=2" Ball	P_ _=Paint
2.88=2-7/8"	24=24"	ST_ _=Steeple	
3.50=3-1/2"	30=30"	SI_ _=Spire	
4.06=3" Fluted	36=36"	FL_ _=Fleur	
4.50=4-1/2"		SE_ _=1-1/2" Spear	
5.08=4" Fluted			
5.56=5-9/16"			

Note:
Finial may be ordered as P28 Gold or same color as assembly, i.e., SH-3571-3.50-24-BL28-P33, for Gold Ball finial and Gloss Black assembly.

Note: 1. 2 bracket assemblies are required for mounting a banner.
2. See Reference Section page v for available paint colors.

Flag Mounts

Pelco has a wide variety of mounting bracket for banners and flags. Choose from ornamental hubs, banded mini-bracs, or flat mounted hubs. Banner bracs for square poles are also available, as well as articulating arms for collapsing against the pole when not in use.

Flag Mount, Hinged Articulating Serrated, Alum

SH-3549 - [Pole Dia] - [Coating]

Pole Dia:
2.88=2-7/8″
3.50=3-1/2″
4.06=3″ Fluted
4.50=4-1/2″
5.08=4″ Fluted
5.56=5-9/16″

Coating:
P_ _=Paint

Flag Mount, 2-Way Articulating Serrated, Alum

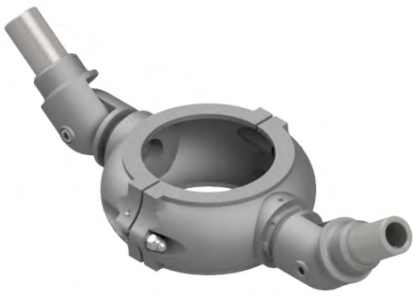

SH-3561 - [Pole Dia] - [Coating]

Pole Dia:
2.88=2-7/8″
3.50=3-1/2″
4.06=3″ Fluted
4.50=4-1/2″
5.08=4″ Fluted
5.56=5-9/16″

Coating:
P_ _=Paint

Flag Mount, Articulating Serrrated, Alum Band Mini-Brac

SH-3539 - [BandLength/Painted] - [Coating]

BandLength/Painted:
29=29″
42=42″
29PB=29″ Painted
42PB=42″ Painted

Coating:
P_ _=Paint

Band Length:	29″	42″
Maximum Pole Dia:	7.3″	11.5″

Note:
If painted band is required, band will be painted same color as assembly.

Flag Mount w/ Articulating Serated, Alum Universal Hub

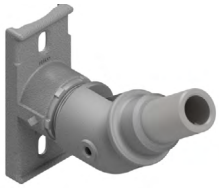

SH-3538 - [Coating]

Coating:
P_ _=Paint

Note: 1. 2 bracket assemblies are required for mounting a banner.
2. See Reference Section page v for available paint colors.

ISO 9001 www.intlcert.com

Pole Accessories

Pelco has a wide variety of mounting bracket for banners and flags. Choose from ornamental hubs, banded mini-bracs, or flat mounted hubs. Banner bracs for square poles are also available, as well as articulating arms for collapsing against the pole when not in use.

3" Ball Steeple Spire Fleur Spear

Flag Rod Assy, Alum

AP-7380 - [Rod Length] - [Finial/Color] - [Coating]

Rod Length	Finial/Color	Coating
42=42"	BL_ _=2" Ball	P_ _=Paint
52=52"	SE_ _=1-1/2" Spear	
	SI_ _=Spire	
	ST_ _=Steeple	
	FL_ _=Fleur	

Note:
Finial may be ordered as P28 Gold or same color as assembly, i.e.,
AP-7380-42-ST28-P33, for Gold Ball Steeple finial and Gloss Black assembly.

3" Ball Steeple Spire Fleur Spear

Plant Hanger Rod Assy, Alum

AP-7386 - [Rod Length] - [Finial/Color] - [Coating]

Rod Length	Finial/Color	Coating
18=18"	BL_ _=2" Ball	P_ _=Paint
24=24"	SE_ _=1-1/2" Spear	
30=30"	SI_ _=Spire	
	ST_ _=Steeple	
	FL_ _=Fleur	

Note:
Finial may be ordered as P28 Gold or same color as assembly, i.e.,
AP-7386-18-BL28-P33, for Gold Ball Ball finial and Gloss Black assembly.

AP-7239 - [Coating] (P_ _=Paint)

Break-a-way Coupler, 1"-8NC, Alum For Banner Bracs

AP-5105 - [Coating] (P_ _=Paint)

Mounting Kit, 1" Tube Collar, Alum For Rigid Signs

AP-5132 - [Coating] (P_ _=Paint)

Mounting Kit, 1" Tube Collar, Alum For Free-Swinging Signs

AP-5110 - [Coating] (P_ _=Paint)

Mounting Kit, 1" Tube Collar, Alum For Plant Hanger

Note: 1. See Reference Section page v for available paint colors.

This page is intentionally left blank.

ISO 9001
www.intlcert.com

Regulatory Signs
MUTCD Compliant

Stop Sign, R1-1 w/ Black Back

Size Reflectivity Coating

SF-6000 - [ ] - [ ] - PNC

24=24″ DG3=Diamond Grade
30=30″ EG=Engineering Grade

Yield Sign, R1-2 w/ Black Back

Size Reflectivity Coating

SF-2025 - [ ] - [ ] - PNC

30=30″ DG3=Diamond Grade
36=36″ EG=Engineering Grade

No Outlet Sign, W14-2 w/ Black Back

Size Reflectivity Coating

SF-2033 - [ ] - [ ] - PNC

36=36″ DG3=Diamond Grade
EG=Engineering Grade

Dead End, W14-1 w/ Black Back

Size Reflectivity Coating

SF-2026 - [ ] - [ ] - PNC

24=24″ DG3=Diamond Grade
30=30″ EG=Engineering Grade

Curve Right Sign, W1-2R w/ Black Back

Size Reflectivity Coating

SF-2029 - [ ] - [ ] - PNC

24=24″ DG3=Diamond Grade
EG=Engineering Grade

Curve Left Sign, W1-2L w/ Black Back

Size Reflectivity Coating

SF-2030 - [ ] - [ ] - PNC

24=24″ DG3=Diamond Grade
EG=Engineering Grade

Speed Limit Sign, R1-1 18″ x 24″ w/ Black Back

Speed Limit Reflectivity Coating

SF-2015 - [ ] - [ ] - PNC

20=20MPH DG3=Diamond Grade
25=25MPH EG=Engineering Grade

Slow, Children at Play Sign, W9-12 18″ x 24″ w/ Black Back

Reflectivity Coating

SF-2022 - [ ] - PNC

DG3=Diamond Grade
EG=Engineering Grade

Note: 1. Reflective vinyl complies with ASTM D4956.
2. Contact Pelco for additional MUTCD compliant signs.

Regulatory Signs
MUTCD Compliant

1-Way Sign, R6-1
36" x 12" w/ Black Back

Arrow Reflectivity Coating

SF-2016 - [ ] - [ ] - PNC

L=Left
R=Right

DG3=Diamond Grade
EG-Engineering Grade

3-Way Sign, R1-3a
12" x 6" w/ Black Back

Reflectivity Coating

SF-2027 - [ ] - PNC

DG3=Diamond Grade
EG=Engineering Grade

4-Way Sign, R1-3
12" x 6" w/ Black Back

Reflectivity Coating

SF-2023 - [ ] - PNC

DG3=Diamond Grade
EG=Engineering Grade

Parking Sign, R7-8
12" x 18" w/ Black Back

Reflectivity Coating

SF-2031 - [ ] - PNC

DG3=Diamond Grade
EG=Engineering Grade

Note: 1. Reflective vinyl complies with ASTM D4956.
2. Contact Pelco for additional MUTCD compliant signs.

ISO 9001
www.intlcert.com

Custom Signs

Pelco can manufacture custom signs in sizes shown below. Includes white engineering grade reflective legend on a powder coated background color of your choice.

Sign, 12" Wide x Height w/ 2 Mounting Holes
Powder Coat Background, White Reflective Legend

SF-5031 - [Height] - [Coating]

Height: 09=9" 12=12" 18=18"

Coating: P__=Paint

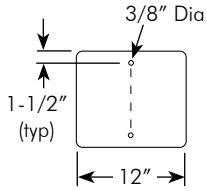

Sign, 18" Wide x Height w/ 2 Mounting Holes
Powder Coat Background, White Reflective Legend

SF-5016 - [Height] - [Additional Vinyl] - [Coating]

Height: 12=12" 18=18" 24=24" 30=30"

Additional Vinyl: Blank=None RD=Red

Coating: P__=Paint

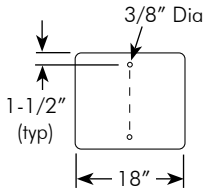

Sign, 24" Wide x Height w/ 2 Mounting Holes
Powder Coat Background, White Reflective Legend

SF-5027 - [Height] - [Coating]

Height: 18=18" 24=24" 30=30" 36=36"

Coating: P__=Paint

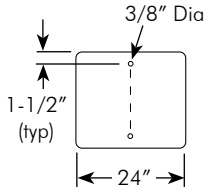

Sign, 36" Wide x Height w/ 4 Mounting Holes
Powder Coat Background, White Reflective Legend

SF-5028 - [Height] - [Coating]

Height: 18=18" 24=24" 30=30" 36=36"

Coating: P__=Paint

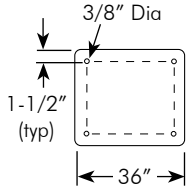

Note: 1. Reflective vinyl complies with ASTM D4956.
2. See Reference Section page v for available paint colors.
3. Specify sign legend when ordering.

Street Name Signs - Post Top

Pelco's Street Name Signs are available in several sizes and shapes, and either a post top or rigid cantilever mount. Choose powder coated with engineering grade reflective vinyl or high intensity diamond grade reflective signs.

6" Street Name Sign, Post Top Mount Extruded Blade
Powder Coat Background, White Reflective Legend

SF-5011 - [Length] - [Coating]

Length: 24=24" 30=30" 36=36" 42=42" 48=48"

Coating: P_ _=Paint

SF-5020 - [Length] - [Coating]

Length: 24=24" 30=30" 36=36" 42=42" 48=48"

Coating: P_ _=Paint

SF-5071 - [Length] - [Coating]

Length: 24=24" 30=30" 36=36" 42=42" 48=48"

Coating: P_ _=Paint

6" Street Name Sign, Post Top Mount Extruded Blade
Reflective Background, White Reflective Legend

SF-5000 - [Length] - [Reflectivity] - PNC

Length: 24=24" 30=30" 36=36" 42=42" 48=48"

Reflectivity: DG3GR=Diamond Grade Green DG3BL =Diamond Grade Blue

SF-5034 - [Length] - [Reflectivity] - PNC

Length: 24=24" 30=30" 36=36" 42=42" 48=48"

Reflectivity: DG3GR=Diamond Grade Green DG3BL =Diamond Grade Blue

SF-5081 - [Length] - [Reflectivity] - PNC

Length: 24=24" 30=30" 36=36" 42=42" 48=48"

Reflectivity: DG3GR=Diamond Grade Green DG3BL =Diamond Grade Blue

Note: 1. Reflective vinyl complies with ASTM D4956.
2. See Reference Section page v for available paint colors.
3. Specify sign legend when ordering.

ISO 9001 www.intlcert.com

Street Name Signs - Post Top

Pelco's Street Name Signs are available in several sizes and shapes, and either a post top or rigid cantilever mount. Choose powder coated with engineering grade reflective vinyl or high intensity diamond grade reflective signs.

9" Street Name Sign, Post Top Mount Extruded Blade
Powder Coat Background, White Reflective Legend

SF-5048 - [Length] - [Coating]

Length: 24=24" 30=30" 36=36" 42=42" 48=48"

Coating: P_ _=Paint

SF-5074 - [Length] - [Coating]

Length: 24=24" 30=30" 36=36" 42=42" 48=48"

Coating: P_ _=Paint

9" Street Name Sign, Post Top Mount Extruded Blade
Reflective Background, White Reflective Legend

SF-5047 - [Length] - [Reflectivity] - PNC

Length: 24=24" 30=30" 36=36" 42=42" 48=48"

Reflectivity: DG3GR=Diamond Grade Green; DG3BR=Diamond Grade Brown; DG3BL=Diamond Grade Blue

Note: 1. Reflective vinyl complies with ASTM D4956.
2. See Reference Section page v for available paint colors.
3. Specify sign legend when ordering.

Street Name Signs - Rigid Cantilever

Pelco's Street Name Signs are available in several sizes and shapes, and either a post top or rigid cantilever mount. Choose powder coated with engineering grade reflective vinyl or high intensity diamond grade reflective signs.

6" Street Name Sign, Rigid Cantilever Mount
Powder Coat Background, White Reflective Legend

SF-5008 - [Length] - RM - [Coating]

Length: 24=24" 30=30" 36=36" 42=42" 48=48"

Coating: P__=Paint

SF-5033 - [Length] - RM - [Coating]

Length: 24=24" 30=30" 36=36" 42=42" 48=48"

Coating: P__=Paint

6" Street Name Sign, Rigid Cantilever Mount
Reflective Background, White Reflective Legend

SF-5007 - [Length] - [Reflectivity] - RM - PNC

Length: 24=24" 30=30" 36=36" 42=42" 48=48"

Reflectivity: DG3GR=Diamond Grade Green DG3BL =Diamond Grade Blue

SF-5032 - [Length] - [Reflectivity] - RM - PNC

Length: 24=24" 30=30" 36=36" 42=42" 48=48"

Reflectivity: DG3GR=Diamond Grade Green DG3BL =Diamond Grade Blue

Note: 1. Reflective vinyl complies with ASTM D4956.
2. See Reference Section page v for available paint colors.
3. Specify sign legend when ordering.

ISO 9001 www.intlcert.com

Street Name Signs - Rigid Cantilever

Pelco's Street Name Signs are available in several sizes and shapes, and either a post top or rigid cantilever mount. Choose powder coated with engineering grade reflective vinyl or high intensity diamond grade reflective signs.

9" Street Name Sign, Rigid Cantilever Mount
Powder Coat Background, White Reflective Legend

SF-5046 - [Length] - RM - [Coating]

Length:
24=24"
30=30"
36=36"
42=42"
48=48"

Coating:
P__=Paint

SF-5042 - [Length] - RM - [Coating]

Length:
24=24"
30=30"
36=36"
42=42"
48=48"

Coating:
P__=Paint

9" Street Name Sign, Rigid Cantilever Mount
Reflective Background, White Reflective Legend

SF-5045 - [Length] - [Reflectivity] - RM - PNC

Length:
24=24"
30=30"
36=36"
42=42"
48=48"

Reflectivity:
DG3GR=Diamond Grade Green
DG3BR =Diamond Grade Brown
DG3BL =Diamond Grade Blue

SF-5041 - [Length] - [Reflectivity] - RM - PNC

Length:
24=24"
30=30"
36=36"
42=42"
48=48"

Reflectivity:
DG3GR=Diamond Grade Green
DG3BR =Diamond Grade Brown
DG3BL =Diamond Grade Blue

Note: 1. Reflective vinyl complies with ASTM D4956.
2. See Reference Section page v for available paint colors.
3. Specify sign legend when ordering.

Sign Frames

Pelco offers both a decorative and a back plate option for framing your sign, in sizes shown below.

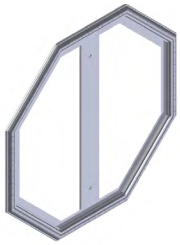

Sign Frame, Decorative Alum
24" Octagonal Stop Sign

AP-7013-1 - Coating ☐ P__=Paint

Sign Frame, Decorative Alum
30" Octagonal Stop Sign

AP-7012-1 - Coating ☐ P__=Paint

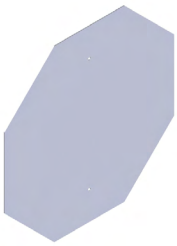

Back Plate Frame, Alum
24" Octagonal Stop Sign

SH-1849 - Coating ☐ P__=Paint

Back Plate Frame, Alum
30" Octagonal Stop Sign

SH-1850 - Coating ☐ P__=Paint

Sign Frame, Decorative Alum
24" x 24" Regulatory Sign

AP-7237 - Coating ☐ P__=Paint

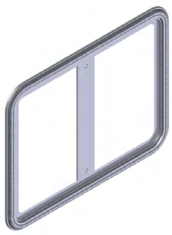

Sign Frame, Decorative Alum
24" x 18" Regulatory Sign

AP-7228 - Coating ☐ P__=Paint

Sign Frame, Decorative Alum
18" x 24" Regulatory Sign

AP-7027 - Coating ☐ P__=Paint

Sign Frame, Decorative Alum
12" x 18" Regulatory Sign

AP-7215 - Coating ☐ P__=Paint

Note: 1. See Reference Section page v for available paint colors.

Post Tops

Both finial caps and rigid sign mounting caps are available for 2″ and 2-1/2″ posts.

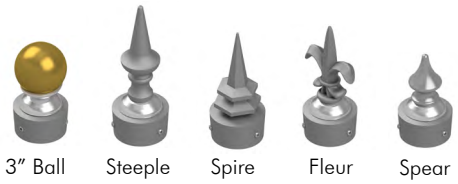

Post Cap Assy, Alum
For 2″ (2-3/8″ OD) Pole SH-1808 - [Finial/Color] - [Coating]

Post Cap Assy, Alum
For 2-1/2″ (2-7/8″ OD) Pole SH-1828 - [Finial/Color] - [Coating]

BL_ _=2″ Ball
ST_ _=Steeple
SI_ _=Spire
FL_ _=Fleur
SE_ _=1-1/2″ Spear
P_ _=Paint

Note:
Finial may be ordered as P28 Gold or same color as assembly, i.e., SH-1808-BL28-P33, for Gold Ball finial and Gloss Black assembly.

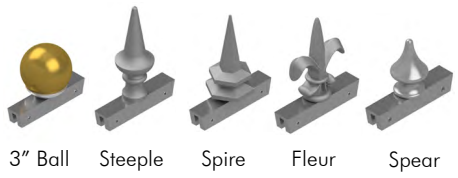

Finial Assy, Alum
w/ Slot for Extruded Blades SH-1813 - [Finial/Color] - [Coating]

BL_ _=2″ Ball
ST_ _=Steeple
SI_ _=Spire
FL_ _=Fleur
SE_ _=1-1/2″ Spear
P_ _=Paint

Note:
Finial may be ordered as P28 Gold or same color as assembly, i.e., SH-1813-BL28-P33, for Gold Ball finial and Gloss Black assembly.

Post Cap Assy, Alum
For 2″ (2-3/8″ OD) Pole SH-1609 - [Coating]

P_ _=Paint

Post Cap Assy, Alum
w/ 5″ Long Slot for Extruded Blades
For 2″ (2-3/8″ OD) Pole SH-1800 - [Coating]

P_ _=Paint

Post Cap Assy, Alum
w/ 5″ Long Slot for Extruded Blades
For 2-1/2″ (2-7/8″ OD) Pole SH-1829 - [Coating]

P_ _=Paint

Post Cap Assy, Alum
w/ 12″ Long Slot for Extruded Blades
For 2-1/2″ (2-7/8″ OD) Pole SH-1868 - [Coating]

P_ _=Paint

90 Cross, Alum
w/ 5″ Lg Slots for Extruded Blade SH-1801 - [Coating]

P_ _=Paint

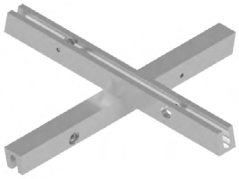

90 Cross, Alum
w/ 12″ Long Slot for Extruded Blades SH-1847 - [Coating]

P_ _=Paint

Note: 1. See Reference Section page v for available paint colors.

Sign Clamps

Pelco offers a variety of clamps for mounting signs to the side of a post. U-bolt, sign clamp, mini-brac and ornamental hub are options in various sizes. For additional sign mounting options see section T6.

U-Bolt Sign Clamp Assy, Alum w/ 5/16" Sign Mounting Hardware

SH-0206 - [Pole Size] - [Coating]

Pole Size:
1.5=1.5" (1-7/8" OD)
2=2" (2-3/8" OD)
2.5=2.5" (2-7.8" OD)
4=4.5" (4-1/2" OD)

Coating:
PNC=Process No Color
P_ _=Paint

U-Bolt Sign Clamp Assy, Alum w/ 5/16" Sign Mounting Hardware For Ornamental Sign Frames

SH-0227 - [Pole Size] - [Coating]

Pole Size:
1.5=1.5" (1-7/8" OD)
2=2" (2-3/8" OD)
2.5=2.5" (2-7.8" OD)
4=4.5" (4-1/2" OD)

Coating:
PNC=Process No Color
P_ _=Paint

Double Sign Clamp Assy, Alum w/ 5/16" Sign Mounting Hardware

SH-0203 - [Pole Size] - [Coating]

Pole Size:
1.5=1.5" (1-7/8" OD)
2=2" (2-3/8" OD)
2.5=2.5" (2-7.8" OD)
4=4.5" (4-1/2" OD)

Coating:
PNC=Process No Color
P_ _=Paint

Note: 1. See Reference Section for available paint colors.
2. See section T6 for additonal sign mounting options.

ISO 9001 www.intlcert.com

Sign Clamps

Pelco offers a variety of clamps for mounting signs to the side of a post. U-bolt, sign clamp, mini-brac and ornamental hub are options in various sizes. For additional sign mounting options see section T6.

Sign Clamp Assy, Alum w/ 5/16" Sign Mounting Hardware

SH-0201 - 3 - [ ]

Pole Size: 3=3" (3-1/2" OD)

Coating: PNC=Process No Color; P_ _=Paint

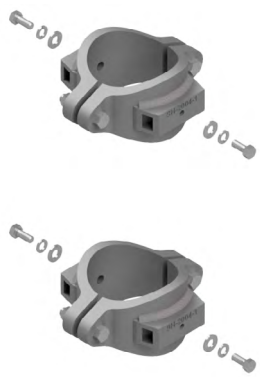

Double Sign Clamp Assy, Alum w/ 5/16" Sign Mounting Hardware

SH-0202 - 3 - [ ]

Pole Size: 3=3" (3-1/2" OD)

Coating: PNC=Process No Color; P_ _=Paint

Sign Mount Assy, Astro Mini-Brac, Alum w/ 5/16" Sign Mounting Hardware

SH-0228 - [ ] - [ ]

Band Length: 29=29" Band; 42=42" Band; 29PB=29" Painted Band; 42PB=42" Painted Band

Coating: PNC=Process No Color; P_ _=Paint

Band Length:	29"	42"
Maximum Pole Dia:	7.3"	11.5"

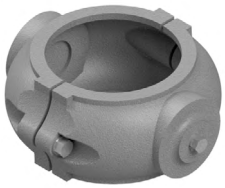

Sign Mount Assy, Ornamental Hub, Alum w/ 5/16" Sign Mounting Hardware

SH-0215 - [ ] - [ ]

Pole Dia: 2.88=2-7/8"; 3.50=3-1/2"; 4.06=3" Fluted; 4.50=4-1/2"; 5.08=4" Fluted; 5.56=5-9/16"

Coating: PNC=Process No Color; P_ _=Paint

Note: 1. See Reference Section for available paint colors.
2. See Reference Section for band clamp kit pole diameters.

ISO 9001 www.intlcert.com

Cantilever Sign Mounts

Pelco Cantilever Sign Mounts are available with a hinged ornamental hub, banded mini-brac, or universal hub and come in various lengths with decorative finial options.

Street Name Sign Bracket, Alum Hinged Ornamental Hub, Single Arm

AP-7362 - [Pole Dia] - [Sign Length] - [Finial/Color] [Coating]

Pole Dia	Sign Length	Finial/Color	Coating
2.38=2-3/8″	24=24″	BL_ _=2″ Ball	P_ _=Paint
2.88=2-7/8″	30=30″	ST_ _=Steeple	
3.50=3-1/2″	36=36″	SI_ _=Spire	
4.06=3″ Fluted	42=42″	FL_ _=Fleur	
4.50=4-1/2″	48=48″	SE_ _=1-1/2″ Spear	
5.08=4″ Fluted			
5.56=5-9/16″			

Note:
Shown with ball finial. Finial may be ordered as P28 Gold or same color as assembly, i.e., AP-7362-3.50-24-BL28-P33, for Gold Ball finial and Gloss Black assembly.

Street Name Sign Bracket, Ornamental Hub, Alum Hinged Ornamental Hub, Double Arm

AP-7369 - [Pole Dia] - [Sign Length] - [Sign Length] - [Finial/Color] - [Coating]

Pole Dia	Sign Length	Sign Length	Finial/Color	Coating
2.38=2-3/8″	24=24″	24=24″	BL_ _=2″ Ball	P_ _=Paint
2.88=2-7/8″	30=30″	30=30″	ST_ _=Steeple	
3.50=3-1/2″	36=36″	36=36″	SI_ _=Spire	
4.06=3″ Fluted	42=42″	42=42″	FL_ _=Fleur	
4.50=4-1/2″	48=48″	48=48″	SE_ _=1-1/2″ Spear	
5.08=4″ Fluted				
5.56=5-9/16″				

Note:
Shown with ball finial. Finial may be ordered as P28 Gold or same color as assembly, i.e., AP-7369-3.50-24-24-BL28-P33, for Gold Ball finial and Gloss Black assembly.

Note: 1. See Reference Section page v for available paint colors.

ISO 9001
www.intlcert.com

Cantilever Sign Mounts

Pelco Cantilever Sign Mounts are available with a hinged ornamental hub, banded mini-brac, or universal hub and come in various lengths with decorative finial options.

Street Name Sign Bracket, Alum Mini-Brac w/ Stainless Steel Bands

AP-7268 - [Sign Length] - [BandLength/Painted] - [Finial/Color] - [Coating]

Sign Length	BandLength/Painted	Finial/Color	Coating
24=24″	29=29″	BL_ _=2″ Ball	P_ _=Paint
30=30″	42=42″	ST_ _=Steeple	
36=36″	29PB=29″ Painted	SI_ _=Spire	
42=42″	42PB=42″ Painted	FL_ _=Fleur	
48=48″		SE_ _=1-1/2″ Spear	

Band Length:	29″	42″
Maximum Pole Dia:	7.3″	11.5″

3″ Ball Steeple Spire Fleur Spear

Note:
Shown with ball finial. Finial may be ordered as P28 Gold or same color as assembly, i.e., SH-3551-3.50-24-BL28-P33, for Gold Ball finial and Gloss Black assembly.
If painted band is required, band will be painted same color as assembly.

Street Name Sign Bracket, Alum Universal Hub

SH-3510 - [Sign Length] - [Finial/Color] - [Coating]

Sign Length	Finial/Color	Coating
24=24″	BL_ _=2″ Ball	P_ _=Paint
30=30″	ST_ _=Steeple	
36=36″	SI_ _=Spire	
42=42″	FL_ _=Fleur	
48=48″	SE_ _=1-1/2″ Spear	

3″ Ball Steeple Spire Fleur Spear

Note:
Shown with ball finial. Finial may be ordered as P28 Gold or same color as assembly, i.e., SH-3510-24-BL28-P33, for Gold Ball finial and Gloss Black assembly.

Note: 1. See Reference Section page v for available paint colors.

Sign Posts

Pelco offers a 2-3/8" and 2-7/8" steel sign post in various length. For additional pole options and details of bases shown below see section T15.

Sign Post, 2-3/8" OD Steel, Direct Bury

PB -5208- [Height] - [Coating]

Height:
06=6'
08=8'
10=10'
12=12'
15=15'

Coating:
P_ _=Paint

ABS Bases:

AP-0804-2.38
Old Towne I

AP-0803-2.38
Rochester I

AP-0810-2.38
Hamilton

Aluminum Bases:

AP-0801-2.38
Old Towne I

AP-0807-2.38
Old Towne II

Note: 1. See Reference Section page v for available paint colors.
2. For more additional information on Bases see page T15-27 through T15-31.
3. For Anchors see sections T11 and T12.

ISO 9001 www.intlcert.com

Sign Posts

Pelco offers a 2-3/8" and 2-7/8" steel sign post in various length. For additional pole options and details of bases shown below see section T15.

Sign Post, 2-7/8" OD Steel, Direct Bury

AP-2072- [Height] - [Coating]

Height:
06=6'
08=8'
10=10'
12=12'
15=15'

Coating:
P_ _=Paint

ABS Bases:

AP-0804-2.88
Old Towne I

AP-0803-2.88
Rochester I

AP-0810-2.88
Hamilton

Aluminum Bases:

AP-0801-2.88
Old Towne I

AP-0807-2.88
Old Towne II

AP-0820-2.88
Huntington

Note: 1. See Reference Section for available paint colors.
2. For additional information on Bases see page T15-27 through T15-31.
3. For Anchors see sections T11 and T12.

This page is intentionally left blank.

ISO 9001
www.intlcert.com